PNWD-3004
BNFL-RPT-016, Rev. 0

Small Column Testing of SuperLig® 639 for Removing ^{99}Tc from Hanford Tank Waste Envelope A (Tank 241-AW-101)

D. L. Blanchard Jr.
D. E. Kurath
J. R. Bontha

August 2000

Prepared for BNFL, Inc.
Under Contract W375-LC-98-4168

PNWD-3004
BNFL-RPT-016, Rev. 0

Small Column Testing of SuperLig® 639 for Removing ^{99}Tc from Hanford Tank Waste Envelope A (Tank 241-AW-101)

D. L. Blanchard Jr.
D. E. Kurath
J. R. Bontha

August 2000

Prepared for
BNFL, Inc.
Under Contract W375-LC-98-4168

Battelle, Pacific Northwest Division
Richland, Washington 99352

SUMMARY

The current BNFL Inc. flow sheet for the pretreatment of the Hanford High-Level tank wastes includes the use of SuperLig® 639 (SL-639) in a dual column system for the removal of technetium-99 (^{99}Tc) from the aqueous fraction of the waste. This sorbent material has been developed and supplied by IBC Advanced Technologies, Inc., American Fork, UT.

The report documents the results of testing the SL-639 sorbent in a small dual column system (4.7 mL each; L/D = 6.0). Approximately 1.2 L of diluted waste ([Na+] = 4.6 M) from tank 241-AW-101 (envelope A) was processed in the test. This waste had been previously clarified in a single tube cross-flow filtration unit, and Cs had been removed by ion exchange using SuperLig®644. All Tc removal process steps were tested including resin bed preparation, loading, feed displacement, water rinse, elution, eluant rinse and resin regeneration. A ^{95m}Tc pertechnetate tracer ($^{95m}TcO_4^-$) was used to follow the progress of the test. Technetium-99 concentrations were determined after the test.

A summary of performance measures is shown in Table S1. The λ values are the number of bed volumes processed when the concentration of pertechnetate (or total Tc) reaches 50% of the feed concentration (C/C_0=0.5) and represent a measure of the effective capacity of the SL-639 resin. The values for pertechnetate (as measured by the ^{95m}Tc tracer using GEA) and total Tc (as measured by ^{99}Tc using ICP-MS) are within the experimental error (+/- 10%). The λ values for the lag column could not be determined as they were only at approximately 15% breakthrough. The maximum decontamination factors (DFs) for pertechnetate and total Tc are based on analysis of the first samples collected from each column and the concentration in the feed. The total Tc maximum DFs are much lower than the maximum DFs observed for pertechnetate, and reflect approximately 3% breakthrough of ^{99}Tc on both columns. This breakthrough is believed to be due to non-pertechnetate, and is very similar to the fraction of ^{99}Tc breakthrough observed by the Savannah River Technology Center during Phase 1A testing of SL-639 with a sample of the same waste. A total of approximately 260 bed volumes of the 241-AW-101 waste were processed through the SuperLig® 639 columns, reaching about 60% ^{99}Tc breakthrough on the lead column and 16.5% on the lag column. The concentration of ^{99}Tc in the effluent composite is 5.1µCi/L (0.298 mg/L), less than 1/5 the expected maximum allowed concentration (26.8 µCi/L at 4.6 M Na) needed to meet the LAW glass ^{99}Tc limit of 0.1 Ci/m^3.

Table S1. Summary of Column Loading Performance Measures

	Flow rate (BV/hr)	**λ**		**Comp DF, Pertech (^{95m}Tc)**	**Comp DF, Total Tc (^{99}Tc)**	**Maximum DF**	
		Pertechnetate (^{95m}Tc)	**Total Tc (^{99}Tc)**			**Pertechnetate (^{95m}Tc)**	**^{99}Tc**
Col 1	6.1	213	235	NA	NA	180	31
Col 2	6.1	NA	NA	24.4	12.6	433	35

Only the lead column was eluted. The elution proceeded very slowly, requiring 70 BV of eluant (0.5 M nitric acid) for the Tc concentration to drop to C/C_0 = 0.01. The peak ^{99}Tc concentration was 7.4 times the ^{99}Tc concentration in the feed, and was found in the 16th bed volume.

TERMS AND ABBREVIATIONS

AEA	alpha energy analysis
ALARA	as low as reasonably achievable
BNFL	BNFL, Inc; subsidiary of British Nuclear Fuels, Ltd.
BV	Bed Volume
DF	decontamination factor, C_0/C
DL	detection limit
EQL	estimated quantitation level
GEA	gamma energy analysis
HLRF	High Level Radiation Facility
IC	ion chromatography
ICP	inductively coupled plasma/atomic emission spectrometry
ICP-MS	inductively coupled plasma/mass spectrometry
λ	lambda; the number of BV processed at 50% breakthrough
MDL	method detection limit
MRQ	minimum reportable quantity
RPL	Radiochemical Processing Laboratory
SAL	Shielded Analytical Laboratory
TC	total carbon
TIC	total inorganic carbon
TOC	total organic carbon
TRU	transuranic

CONTENTS

FIGURES

TABLES

1.0 INTRODUCTION

The current BNFL Inc. flow sheet for the pretreatment of the Hanford High-Level tank wastes includes the use of SuperLig® 639 (SL-639) in a dual column system for the removal of technetium–99 (^{99}Tc) from the aqueous fraction of the waste. This material has been developed and supplied by IBC Technologies, Inc., American Fork, UT.

The work contained in this report involves the small column testing of the SL-639 sorbent. The sample processed was approximately 1.2 L of diluted waste (@ 4.6 M Na) from Tank 241-AW-101 (the 241 prefix, which is common to all Hanford tanks, will not be used hereafter). This waste had been previously clarified in a single tube cross-flow filtration unit (Brooks et al., 1999) and Cs was removed by ion exchange using SuperLig®644 (Kurath et al., 1999a). The Tc removal process steps tested include resin bed preparation, loading, feed displacement, water rinse, elution, and eluant rinse and resin regeneration.

The objectives of this work were to:

- Demonstrate the ^{99}Tc decontamination of Envelope A (Tank AW-101) and provide a technetium decontaminated sample for downstream process testing (i.e. corrosion testing, Low Activity Waste (LAW) melter feed testing and vitrification).

- Demonstrate the effectiveness of all SL-639 process steps including loading, feed displacement, DI water washing, elution and resin regeneration.

- Obtain process performance data for SL-639 at conditions different than those previously tested.

- Investigate SL-639/waste chemistry.

- Investigate the potential for resin and/or column fouling.

2.0 EXPERIMENTAL

2.1 Technetium Removal Column System

A schematic of the Tc removal column system is shown in Figure 2.1. The system, which is mounted in a radiological fume hood, consists of 2 small columns containing the sorbent resin, a small metering pump, 3 valves, a pressure gauge and a pressure relief valve. The pump inlet tube was manually switched between the waste feed and various process solutions. Valves 1, 2 and 3 are three-way valves that can be turned to a flow position, a sample position or a no-flow position. Valve 1 is placed at the outlet of the pump and is used to eliminate air from the system, purge the initial volume of the system or isolate the columns from the pump. Valves 2 and 3 are primarily used for obtaining samples and may also be used to isolate the columns from the rest of the system.

The columns are Kontes Chromaflex chromatography columns made of glass with adjustable plungers on the bottom and the top. The inside diameter of the columns is 1.0 cm which corresponds to a volume of 0.785 mL/cm of length. The connecting tubing is a polyfluorinated plastic with 1/8-in OD and 1/16-in ID. The columns are connected in series with the first column referred to as the lead column and the second column referred to as the lag column. A piston pump (Fluid Metering, Inc., Oyster Bay NY) was used to deliver feed to the columns. The flow rate was controlled from outside of the hood with a stroke rate controller for the pump. The pump was calibrated with the controller and can provide pumping rates of approximately 0-50 mL/hr. The volume actually pumped is determined using the mass of the fluid and the fluid density. The pressure relief valve is set at 40 psi which is below the maximum operating pressure for the columns. The pressure indicated on the pressure gauge remained below 5 psi during the run. The total holdup volume of the system was estimated to be 14 mL (3 BV) with the holdup volume to valve 1 being approximately 4 mL (0.8 BV).

2.2 SL-639 Resin and Bed Preparation

SuperLig® 639 resin consists of a proprietary organic compound (ligand) attached to spherical, styrene beads. The mean diameter of the resin beads (D_p) is reported by the manufacturer as 0.5mm. SuperLig® 639 resin functions by extracting the sodium-pertechnetate salt pair from either acidic or basic solutions. Capacities of ≈15 mg of Re per gram of dry resin were observed for perrhenate (ReO_4^-) removal from 2.35 M $NaNO_3$ solutions at pH 9 and pH 12 (Bruening, 1999a). The solutions contained 120 mg/L Re (added as $NaReO_4$), 3.57 mM $Na_4Fe(CN)_6$ and 0.577 mM Na_2CrO_4, and were pH adjusted using $NaHCO_3$ and Na_2CO_3.

The resin was slurried into the columns in DI water. The bed height was 6.0 cm, giving a bed volume of 4.7 mL, and a length-to-diameter ratio (L/D) of 6. The ratio of the test column diameter (D_c) to the diameter of the resin beads (D_p) was approximately 20:1, which is consistent with the minimum D_c/ D_p ratio to avoid wall-effects during small-scale column tests. When received, duplicate portions (0.5 g each) of the wet resin were dried in an oven at 85 °C until the mass of successive weightings was reasonably constant. This allowed a determination of the F factor, which is the ratio of the mass of the dried exchanger to the mass of the wet exchanger. The bed density was determined previously (Kurath et al., 1999b) by weighing approximately 10 ml of exchanger in a 50 mL graduated cylinder. Based on an as-received bed density of 0.5 g/mL and an F factor of 0.978 the dry mass of SL-639 in each column is estimated to be 2.3 g. The columns were prepared for loading by flushing them with 14.4 BV (67.5 mL) of 1 M NaOH. This was done primarily to flush water from the beds to prevent precipitation of solids on introduction of the feed.

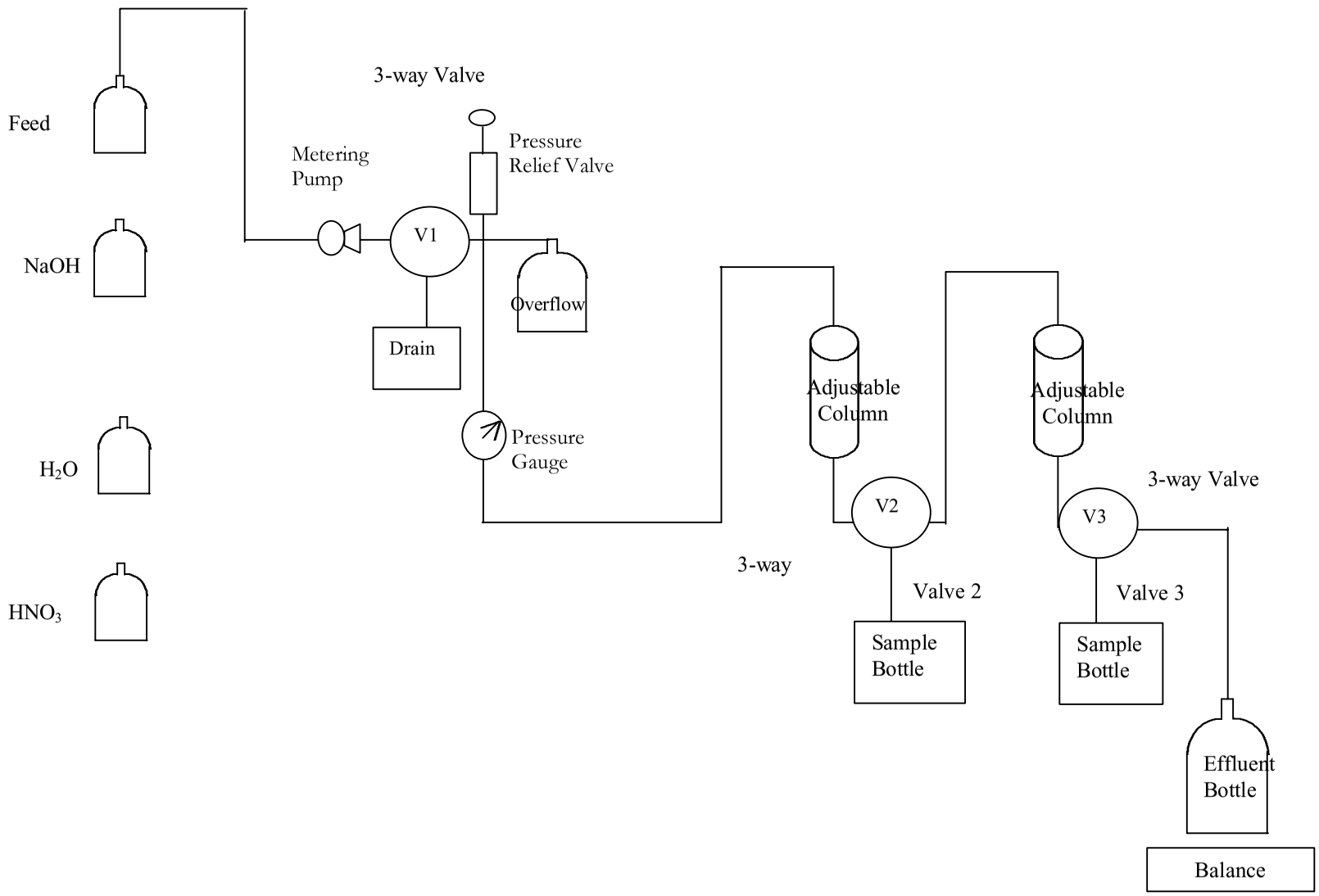

Figure 2.1. Technetium Removal Column System

2.3 Feed Preparation

The Department of Energy acquired a sample of the waste from tank AW-101 during May 1998, taking samples through a single riser and from five different depths within the waste liquid phase. These were received at Battelle's High Level Radiation Facility (HLRF) during the 4th quarter of 1998. The homogenization, dilution, and subsampling of this sample is described in Urie et al. (1999). The diluted AW-101 sample was then processed in a single tube cross-flow filter to remove entrained solids using a 0.1 micron sintered metal Mott filter (Brooks et al., 1999). The diluted feed added to the filtration unit had a sodium concentration of 6.5 M as determined by ICP-AES (Urie et al. 1999). Due to dilution from residual water in the filtration unit, the permeate was determined to have a sodium concentration of 6.05 M (Brooks et al. 1999). The clarified AW-101 sample was then transferred from the HLRF to the Shielded Analytical Laboratory (SAL) hot cells and diluted with DI water to a target concentration of 4.6 M sodium in preparation for Cs ion exchange testing. Following Cs ion exchange, described in Kurath et al. (1999a), the feed was removed from the hot cell and transferred to a radiological hood containing the Tc removal column system. The density of the technetium removal feed was determined with a 25 mL volumetric flask and a 4 place analytical balance.

Approximately 0.5 mCi of ^{95m}Tc ($t_{1/2}$ = 61 days, decays to stable ^{95}Mo) was added to 2.2L of feed as ammonium pertechnetate (NH_4TcO_4) in 1 M NH_4OH to act as a tracer to follow the progress of pertechnetate (TcO_4^-) removal. The amounts of NH_4TcO_4 and NH_4OH added to the waste (4.1E-05 g and 0.875 g) are not expected to significantly change the physical or chemical properties of the waste. The amount of ^{95m}Tc added to the waste (2.2E-05 g) is small relative to the ^{99}Tc already in the waste sample (8.4E-03 g), and is not expected to change the Tc removal behavior of the waste. The additional ^{95}Mo produced by decay is also not expected to change the waste properties.

Previous work has indicated that there may be 15% - 20% inextractable ^{99}Tc in AW-101 that is assumed to be a non-pertechnetate Tc species (Blanchard et al., 2000a). This work also showed that there was little or no conversion of a ^{95m}Tc pertechnetate tracer to non-pertechnetate species for several months after addition to the feed. Because the amount of the ^{95m}Tc tracer added to the samples is very small relative to the amount of ^{99}Tc already present (less than 0.3%) the added tracer is not expected to change the observed K_d's. It acts only as an indicator of the pertechnetate behavior.

2.4 Experimental Procedure and Conditions

The experimental conditions for each process step are shown in Table 2.1. In general the flow rates were maintained as close as possible to the values recommended in the test specifications (Johnson, 1999, Rev. 0). In some steps process solution volumes used were greater than those recommended in an attempt to ensure adequate flushing of the system, as, for instance, in the column preparation with 1.0 M NaOH. The total lead column eluant volume was also increased in order to achieve the cutoff criteria of $C/C_0 = 0.01$ for elution, where C_0 is the concentration of ^{99}Tc in the feed, and C is the concentration of ^{99}Tc in the sample of interest. Only the lead column was eluted. The bed preparation, loading, feed displacement and DI water rinse steps were conducted by passing these solutions through both resin beds connected in series. The elution and elution rinse were conducted on only the lead column, but the final step, regeneration, was again conducted on both columns in series. The second column was left loaded with ^{99}Tc in order to investigate, in a subsequent test (Blanchard et al., 2000b), the effect of changing the waste feed while loading a bed of SL-639, as per BNFL test specifications (Johnson, 1999, Rev. 0).

Table 2.1. Experimental Conditions

Process step	Solution	Total Vol, BV (mL)	Flow Rate, BV/hr (mL/hr)	Time (hr)
Column prep	1.0 M NaOH	14.3 (67.5)	10.6 (50)	1.4
Loading	AW-101 Feed	262 (1232)	6.1 (28.8)	42.8
Feed displacement	0.1 M NaOH	8.5 (40)	7.3 (34.2)	1.2
DI water rinse	DI water	6.7 (100)	3.1 (47)	2.1
Elution (lead col)	0.5 M HNO_3	69.8 (329)	1.0 (4.9) / 3.0 (13.9)	39.4
1st Eluant rinse (lead col)	DI water	6.2 (29.2)	6.1 (28.6)	1.0
2nd Eluant rinse (lead col)	DI water	6.0 (28.1)	6.0 (28.1)	1.0
Regeneration	0.25 M NaOH	5.9 (27.9)	5.9 (27.9)	1.0

All steps generally proceeded as expected, with the exception of the elution. This was expected to require approximately 10 hours to reach $C/C_0 = 0.01$, based on the test specifications (Johnson, 1999, Rev. 0), but was found to proceed much more slowly. The elution rate was increased after approximately 24 hours to limit the cost of the run, as per discussion with the BNFL Pretreatment Technical Manager. The elution was halted after approximately 33 hours, at the end of normal business hours on a Friday afternoon before a long holiday weekend, again to limit the costs incurred, and again as per discussion with the BNFL Pretreatment Technical Manager. The column was rinsed with DI water to prevent the possibility of reaction of the acid eluant with the organic resin over the long weekend. The elution was restarted and completed after a four-day shutdown on the next business day.

The adjustable plungers at the top of each column were used to minimize the volume of solution above each of the resin beds. The bed volumes changed less than 0.2 cm (0.16 mL or 3.3 %) during the run. The height of liquid above the beds was kept to less than 0.5 cm (0.4 mL).

The sampling and analysis protocol is shown in Table 2.2. The TcO_4^- C/C_0 was determined in all samples by counting the ^{95m}Tc gamma emission at 205 KeV with a portable GEA instrument. The C/C_0 were determined by taking the ratio of the peak areas of the feed and the effluent samples. The feed sample was recounted periodically (at least every 24 hours) to minimize the effects of the ^{95m}Tc decay on the C/C_o calculations. This method allowed near real time analysis of the samples. The response time was limited by the rate at which samples could be removed from the hood. The ^{99}Tc activities were determined in selected samples by ICP-MS after the run was concluded. The sodium and other metal concentrations were determined with ICP-AES. The OH^- concentration was determined by titration with hydrochloric acid.

Table 2.2. Sampling Interval and Analyses

Process Step	Lead Column BV	Lag Column BV	Approx Sample Vol (mL)	Analyses
Column prep	-	-	-	-
Loading	Every 20 BV	Every 40 BV	2	ICP-MS
Feed displmt	-	Every 1 BV	5	ICP, ICP-MS, OH-
DI water rinse	-	Every 1 BV	5	ICP, ICP-MS, OH-
Elution	Every 1 BV/ 3 BV	-	5/15	ICP-MS
Eluant rinse	Every 1 BV	-	5	ICP-MS
Regeneration	-	1 composite	28	ICP, ICP-MS, OH-
Composite Samples				
Effluent	-	-	5	ICP-MS
Eluate	1 composite	-	17.5	ICP-AES, TOC, ICP-MS

During the loading phase, the treated effluent was collected in an effluent bottle except for the small (2 mL) analytical samples that were taken. A composite sample from the effluent bottle was analyzed for ^{99}Tc by ICP-MS. The rest of the samples were collected in approximately 1 BV aliquots, except that the eluant samples collected while running at 3 BV/hr were collected in approximately 3 BV increments. A composite sample of the eluate was prepared and submitted for ICP-MS, ICP-AES and TOC.

Batch contacts of the SL-639 resin with the AW-101 feed were performed to assess the equilibrium distribution of pertechnetate between the feed and resin. The contacts were performed at a phase ratio of approximately 100 (liquid volume to exchanger mass). Typically, 0.05 g of exchanger was contacted with 5 mL of solution. The exchanger mass was determined to an accuracy of 0.0001 g. The waste volume was transferred by pipette and the actual volume was determined using the mass difference (accuracy of 0.0001 g) and the solution density. Agitation was provided by a back-and-forth shaker set at 250 - 300 cycles per minute for 72 hours. The temperature was not controlled but was generally 24 (± 1)°C over the course of the 3-day contacts.

Solutions were analyzed by GEA to determine the initial and final ^{95m}Tc activities, which were assumed to be proportional to the corresponding pertechnetate concentrations. Only the $^{95m}TcO_4^-$ distribution was assessed – none of the samples were analyzed for ^{99}Tc. Contacts were performed using the feed as received and also spiked with $^{99}TcO_4^-$ to make two additional feed samples with higher concentrations of ^{99}Tc. Results of previous contacts of SL-639 with AW-101 feed (Kurath et al., 1999b; $[Na^+] = 6.59$ M, more concentrated than the feed used in the tests reported here) were used to estimate the ^{99}Tc spike required to give a final ^{99}Tc concentration close to the initial, unspiked feed. The second spike was chosen to give a final ^{99}Tc concentration approximately 10X larger than this. All contacts were run in duplicate and blank samples (i.e., without the ion exchange resin) were used to determine the initial ^{95m}Tc activities. The batch distribution coefficient, K_d (with units of mL/g), was determined for each contact using the relationship;

$$K_d = \frac{(C_0 - C_1)}{C_1} * \frac{V}{M * F} \quad ,$$

where C_0 and C_1 are the initial and final activities, respectively, of the ^{95m}Tc, V is the volume of the liquid sample (mL), M is the mass of the ion exchanger (g), and F is the mass of a sample of the resin after drying divided by the mass before drying. Two samples were used for the F factor determination, and were collected when the resin samples for the contacts were prepared in order to eliminate mass differences due to atmospheric conditions.

The λ value is the number of column volumes of feed processed in a column flow test when $C/C_0 = 50\%$, and is a direct indicator of the effective capacity of the resin. It may be predicted from a batch contact distribution coefficient, K_d, by the relationship $\lambda = K_d * \rho_B$, where ρ_B is the bed density of the resin in the waste. The bed density was previously found to be 0.5 g/mL (Kurath et al., 1999b). The experimental λ values from breakthrough curves were determined from a fit of the breakthrough data on a probability plot above 120 CV, where the data appeared to form a straight line on the plot. Initial DF's were calculated as C_0/C_1, where C_1 is the concentration in the first sample collected from each column.

3.0 RESULTS AND DISCUSSION

3.1 Feed Composition

The composition of the Tc removal feed is shown in Table 3.1. The concentrations of Na, K, Al, and Cr were determined by analysis of a sample of the Cs ion exchange feed by ICP-AES. The effluent from the Cs ion exchange was used as feed for the Tc removal test. The only significant change is expected to be Cs removal. The Al and Cr are assumed to be oxo-anions on the basis of the waste chemistry. Other anion concentrations were determined in a sample of the Tc removal feed by IC, except carbonate and hydroxide, which are estimated on the basis of the known sample dilution from component concentrations given in the characterization report (Urie et al. 1999). The feed had a light yellow color, probably due to the presence of chromate (CrO_4^-). The ^{99}Tc activity was determined in a sample of the Tc removal feed by ICP-MS. The total anion normality, 5.5 N, is 10% higher than the total cation normality, 5.0 N. This difference is within the experimental and analytical error.

Table 3.1. Composition of Envelope A (AW-101) Tc Column Feed

Cations, M	
Na^+	4.59
K^+	0.39
Anions, M	
AlO_2^- (2)	0.411
Br	<3E-3
Cl^-	7.53E-2
CO_3^{2-}	0.13 (1)
CrO_4^{-2} (2)	8.4E-4
F^-	5.37E-2
NO_2^-	1.01
NO_3^-	1.50
OH^-	2.2 (1)
PO_4^{-3}	<4E-3
SO_4^{-2}	7.2E-3
Oxalate	< 5E-3
^{99}Tc and Competing Ion Ratios	
^{99}Tc, µCi/L (mg/L)	64.1 (3.75)
$NO_3^-/^{99}$Tc mole ratio	3.78E+4
$CrO_4^{-2}/^{99}$Tc mole ratio	22.2
Solution Density, g/mL	1.228

1) Estimated from the diluted feed characterization data reported in PNWD-2463, BNFL-RPT-003, Rev 0.
2) Al and Cr determined by ICP-AES. Anionic form is assumed on the basis of waste chemistry.
3) The raw analytical results may be found in the appendix.

3.2 Loading (Tc Breakthrough Curves), Feed Displacement and Water Wash

Column loading with the diluted AW-101 sample was started immediately after the column preparation with 1.0 M NaOH. The initial 1.8 BV of effluent was not collected. This prevented most of the holdup of approximately 3 BV of 1.0 M NaOH in the system from being mixed with the AW-101 effluent. Small samples (about 2 mL) were collected from the lead column every 20 BV of feed and from the lag column every 40 BV of feed. The initial samples were collected from the columns after just 10 BV to determine the maximum decontamination factors (DFs). The DF of a sample is defined as C_0/C. The loading phase generally went well except for some leakage of air into the lag column, as indicated when the air-liquid interface dropped below the top of the bed. (The air most likely leaked in around the adjustable plunger seal, since feed was observed to leak past this seal in the opposite direction in previous tests.) At approximately 12 BV the loading was stopped for 27 minutes to remove this air from the lag column. The air did not appear to get into the resin beds and there was no discernable discontinuity in the breakthrough curve.

The ^{99}Tc and ^{95m}Tc concentrations in the load effluent samples are shown in Figure 3.1 as C/C_0 (as %) vs. the bed volumes of feed processed through each column. The C_0 value for ^{99}Tc was found to be 64.1 µCi/L (3.75 mg/L). The initial ^{95m}Tc C_0 measured with the portable GEA was 1820 counts/min/mL of sample. This decayed to 1664 counts/min/mL of sample by the end of the run. The raw ^{99}Tc ICP-MS data and ^{95m}Tc GEA data and associated calculations may be found in the appendix. The C/C_0 % values are plotted on a log-probability scale. Ideal breakthrough curve data for an ion exchange resin under diffusion limited conditions gives a straight line when plotted on this scale (Buckingham, 1967). The C/C_0 value of 0.42 (i.e., 42%) is marked on the plot. This corresponds to the expected maximum allowed effluent concentration needed to meet the LAW glass ^{99}Tc limit of 0.1 Ci/m^3.

Results for ^{95m}Tc and ^{99}Tc are significantly different early in the run. The first ^{99}Tc C/C_0 value for the lead column and the first two for the lag column are all very near 3% (3.2%, 2.9% and 3.4%, respectively). These are significantly higher than the corresponding ^{95m}Tc C/C_0 values (0.6%, 0.2%, and 1.3%, respectively). The ^{99}Tc is believed to be present in both pertechnetate and non-pertechnetate species, as shown previously for samples from this and other tanks (Schroeder et al., 1995; Blanchard et al., 1997; Blanchard et al., 2000a; Blanchard et al., 2000b). In these studies it was shown that Reillex™–HPQ anion exchange resin (Reilly Industries, Inc.), ABEC 5000 sorbent (Eichrom Industries, Inc.) and SL-639 (IBC Advanced Technologies, Inc.) are partly or completely ineffective for removal of these non-pertechnetate species. The results shown in Figure 3.1 corroborate this result for SL-639. Most of the 3% initial breakthrough of ^{99}Tc is probably due to the non-pertechnetate species that are present, while the lower values for the ^{95m}Tc pertechnetate tracer indicate that the initial pertechnetate breakthrough was less than 1%. Removal of the non-pertechnetate by the second column was not significant, as the ^{99}Tc values for the first samples from the first and second columns are the same within the experimental error. In contrast, the ^{95m}Tc C/C_0 was lower on the second column (0.2%) than on the first column (0.6%) for these first samples, indicating additional removal of pertechnetate by the second column.

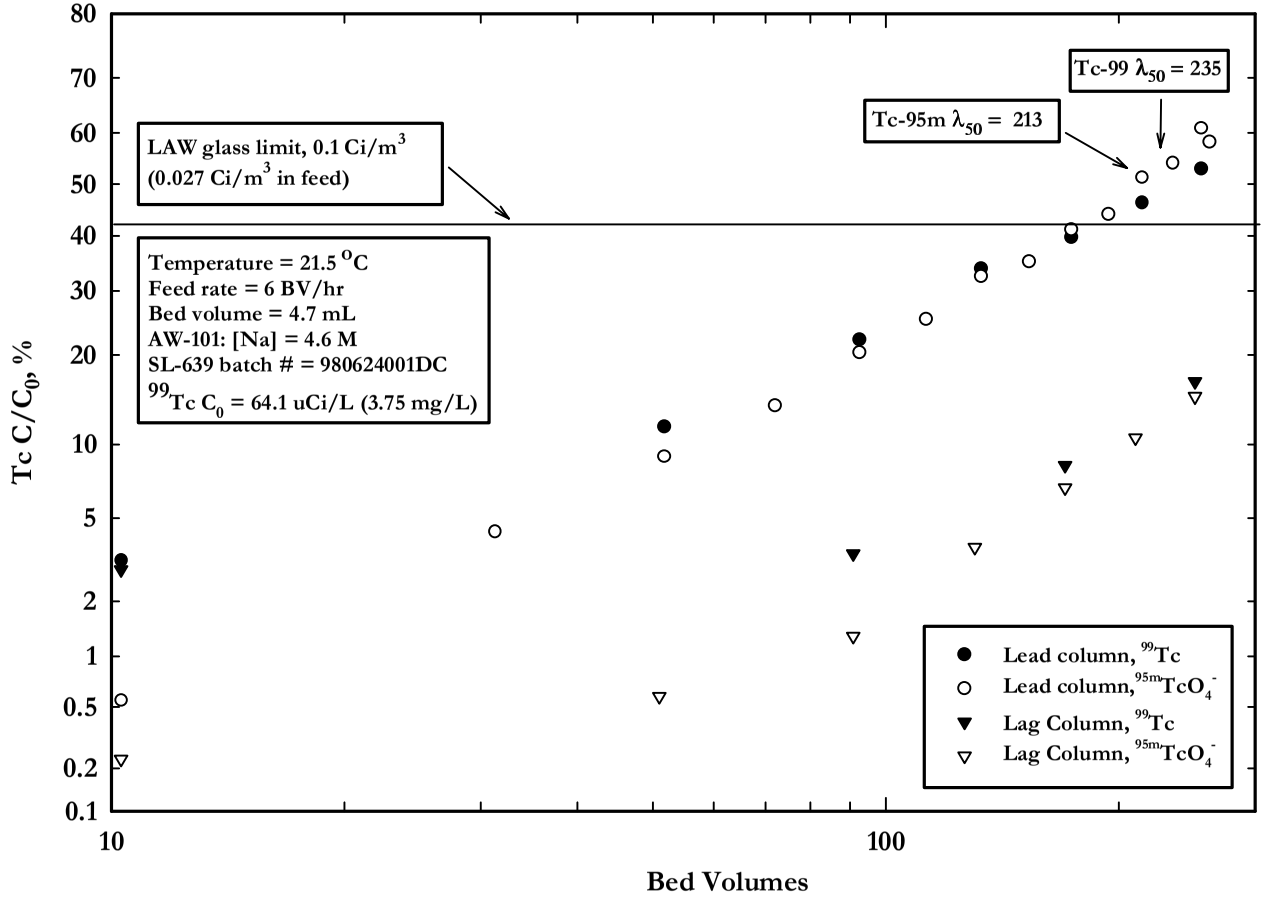

Figure 3.1. ^{99}Tc and ^{95m}Tc Breakthrough Curves, First and Second Columns

The maximum DFs for ^{99}Tc for the first and second columns (derived from the ^{99}Tc concentration in the first sample from each column) are 31 and 35. The corresponding maximum DFs for pertechnetate (similarly derived from the ^{95m}Tc C/C_0 in the first sample from each column) are 180 and 433. The large difference between the ^{99}Tc and the ^{95m}Tc maximum DFs is a result of ^{99}Tc in the non-pertechnetate that passes unextracted through both columns, as discussed above.

The ^{99}Tc λ value for the lead column is 235; the ^{95m}Tc λ value for the lead column is 213. These are the same within the experimental error, indicating that the effect of the relatively low non-pertechnetate concentration on the Tc λ was not observable at 50% breakthrough in this test. Breakthrough on the second column at the conclusion of the loading phase was sufficiently low (approximately 15%) that extrapolation to determine the λ values for the second column is not practical.

The distribution coefficient for pertechnetate was estimated from batch contacts to be between 470 mL/g and 660 mL/g. (See Appendix A for data). The predicted pertechnetate lead column λ value is therefore calculated to be between 235 and 330. The observed λ value for ^{95m}Tc is at the low end of this range and that for ^{99}Tc is below the range. The latter result is expected, since the ^{99}Tc results include the effect of any non-pertechnetate Tc present. The presence of non-pertechnetate Tc reduces the number of column volumes processed before reaching $C/C_0 = 0.5$, since the gradually increasing pertechnetate breakthrough rides on top of a constant breakthrough of non–pertechnetate Tc that begins immediately on loading.

The breakthrough curves are linear on the log-probability scale after the first few points. The deviation for the first few points is toward higher C/C_0 than expected based on extrapolation of the linear region observed later in the run. This is probably mostly due to mixing of the feed with the residual conditioning solution (1 M NaOH) in the bed. The conditioner is much lower ionic strength than the feed, and SL-639 is less effective for pertechnetate removal at lower feed ionic strengths. The ^{99}Tc curves also deviate from linearity due to the presence of non-pertechnetate ^{99}Tc, which breaks through immediately.

The overall ^{99}Tc DF was 12.6, as determined from the concentration of ^{99}Tc in the feed and in the composite from the loading effluent. The overall pertechnetate DF was 24.4, and was determined from the activity of ^{95m}Tc in the feed and the composite from the loading effluent. The concentration of ^{99}Tc dropped from 64.1 μCi/L (3.75 mg/L) in the feed (Table 3.1) to 5.1 μCi/L (0.298 mg/L) in the effluent composite. The concentration in the effluent composite is less than 1/5 the expected maximum allowed concentration needed to meet the LAW glass ^{99}Tc limit of 0.1μCi/m^3.

The initial ^{99}Tc breakthrough observed in this test (approximately 3%) is very close to that observed during Phase IA testing by Hassan and McCabe (1997; 2.4% to 2.9%). A comparison of pertechnetate results from this test with corresponding results of Hassan and McCabe cannot be made, as a pertechnetate tracer was not used in their test. Similarly, λ values cannot be compared, as a C/C_0 of only 11.3% was reached in that test.

Both beds were flushed with 8.5 BV of 0.1 M NaOH at 7.3 BV/hr to displace the feed prior to elution. (Direct contact of the feed and the eluant, 0.5 M HNO_3, would result in precipitation of some of the feed components.) The feed displacement was followed by a de-ionized (DI) water rinse of 6.2 BV at 6.2 BV/hr. The ^{99}Tc and ^{95m}Tc concentrations in feed displacement and DI water rinse effluent samples taken after the second column are shown in Figure 3.2 as C/C_0 % vs. the bed volumes of feed processed through the columns. The C/C_0 % values of the feed displacement samples drop off slightly from the last load value from the second column. It appears that some of the Tc is being removed from the columns during this phase. Technetium removal is significant during the DI water rinse - the C/C_0 % values rise rapidly after a 3 - 4 BV lag as the caustic feed displacement solution is flushed from the columns. The observed Tc removal during the DI water rinse is consistent with information provided by the SL-639

resin manufacturer that decreasing the ionic strength of the solution contacting the resin will elute it. Savannah River Technology Center personnel (Westinghouse Savannah River Company, Aiken SC) have demonstrated water elution of rhenium (King et al., 2000) and technetium (Hassan and McCabe, 1997) from SL–639 resin.

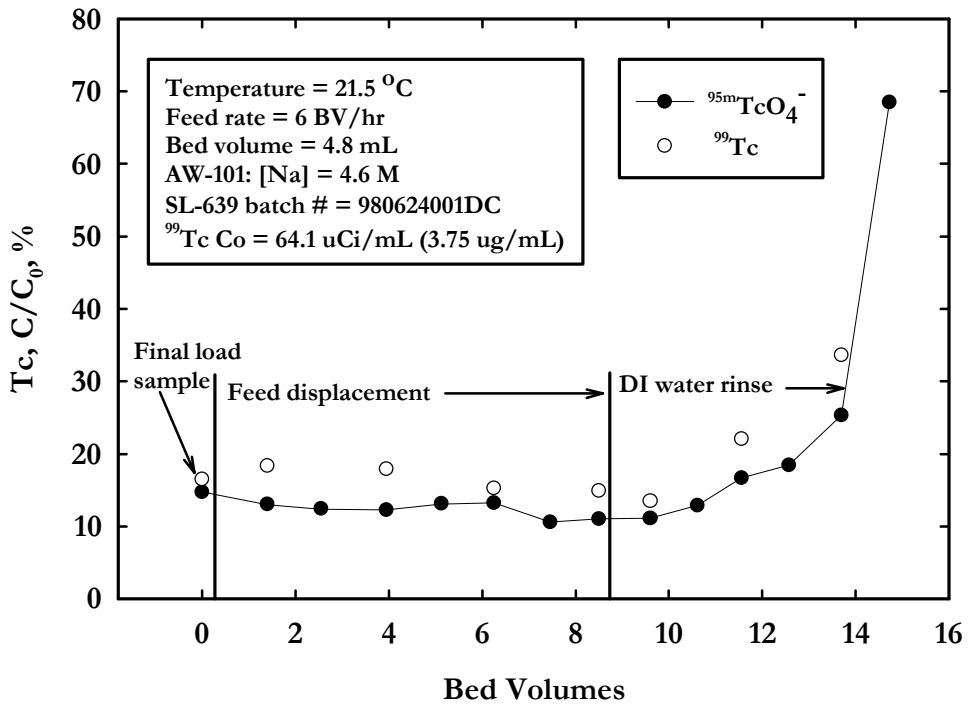

Figure 3.2. ^{99}Tc and ^{95m}Tc C/C_0, for Feed Displacement and DI Water Rinse

The concentrations of sodium (Na), potassium (K), aluminum (Al) and hydroxide (OH) in the feed displacement and DI water rinse are shown in Figure 3.3. The concentrations of the Na, K, and Al are indicated on the left axis in µg/mL; the OH molarity (M) is shown on the right axis. Both axes are logarithmic scales in order to clearly show the roughly 100 fold decrease in concentrations. The samples were taken from the effluent line after the lag column, after the solutions had passed sequentially through both columns. Every other sample was analyzed. Analytical results and calculations may be found in the appendix.

No effort was made to clear the holdup from the column system before collection of the feed displacement samples. The concentrations of Na, K, and Al in the first two feed displacement samples (corresponding to the first 4 BV) are the same, within error, as they are in the feed. The color of the first few samples was also the same color as the feed. Based on these observations, the first 4 BV were relatively pure feed being flushed from the system. This is slightly more than the estimated 3 BV system holdup volume (Section 2.1), and may indicate that the estimate is slightly low.

The displacement of the feed is reasonably sharp, with the concentrations of K, Al, P and Cr dropping by 85% during the 8.5 BV caustic wash. The concentrations of these elements dropped by another 85% during the 6 BV DI water rinse.

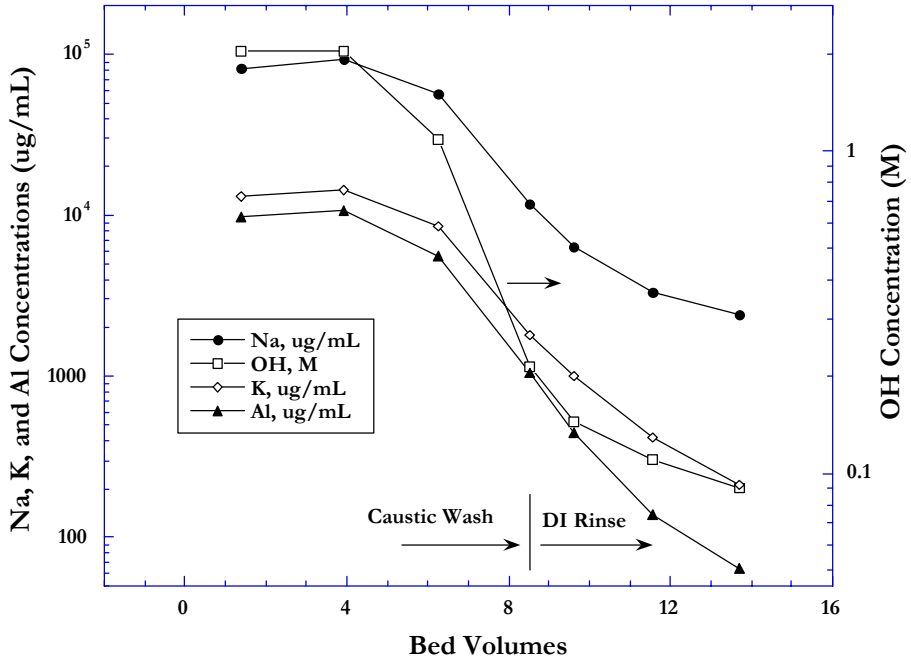

Figure 3.3. Component Concentrations in Feed Displacement and DI Water Rinse Samples

3.3 Elution, Eluant Rinse and Regeneration

The lead column was eluted with 0.5 M nitric acid at the completion of the DI water rinse. The eluate was collected initially in 1 BV increments, and later in 3 BV increments, as described below. The lead column was rinsed with DI water before a break in its elution, and then again at the completion of the elution. Both columns were flushed with 0.25 M NaOH (6 BV, 6 BV/hr) for regeneration following the final rinse of the lead column. All the regeneration effluent was collected in a single batch. The ^{95m}Tc C/C_0 for each sample was determined soon after collection (generally within an hour). The ^{99}Tc concentrations in selected samples were determined later by ICP-MS. The elution, elution rinse and regeneration data are shown in Figure 3.4. The Y axis is a logarithmic scale to clearly show the large range of C/C_0 values. (Note that these are not $\%C/C_0$ values.)

The elution was interrupted for 20 minutes after the first BV when it appeared that the eluant level had dropped below the top of the bed. (This proved to be an optical illusion - the bed was well covered.) The subsequent sample had a very high C/C_0, probably due to buildup of Tc in the eluant as it sat in the bed during the interruption.

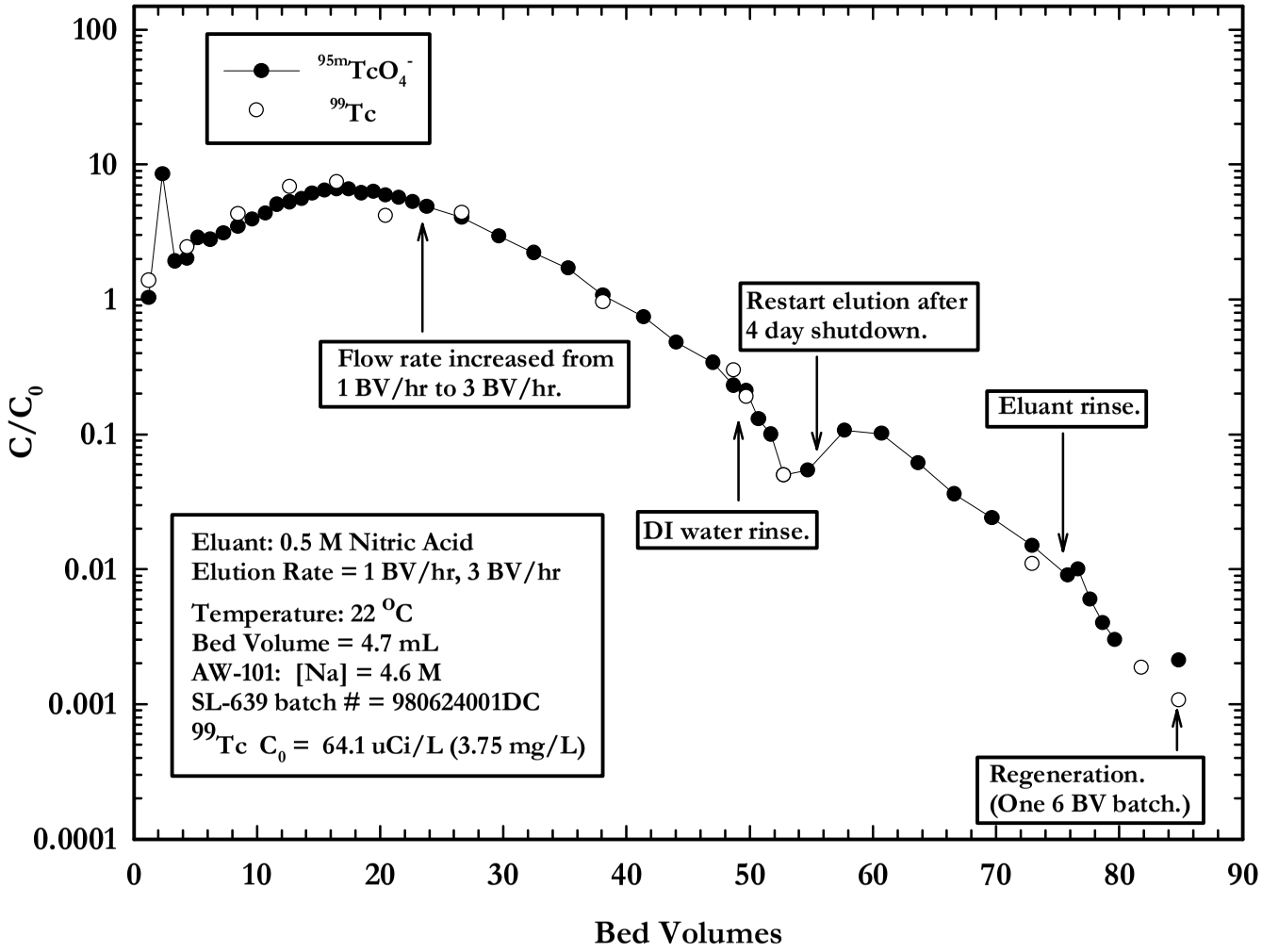

Figure 3.4. Elution, Eluant Rinse and Regeneration of Lead Column

The elution proved very slow, with the ^{95m}Tc C/C_0 peaking at 6.6 in the 16th BV, and still at 4.9 in the 23rd BV. (The ^{99}Tc C/C_0 also peaked in the 16th BV, at 7.4, and was 4.4 in the 24th sample. Every fourth sample was analyzed for ^{99}Tc.) The flow rate was increased to 3 BV/hr after the 23rd BV, as described in Section 2.4 above, and samples were collected in 3 BV batches. There does not appear to be a significant change in the elution rate on a bed volume basis. Therefore if time is a concern, it appears that the bed may be eluted three times faster without decreasing the amount of Tc eluted per BV of eluant. The elution was stopped after 49 BV (approx. 33 hours after the elution was begun), at a ^{95m}Tc C/C_0 of 0.23 (^{99}Tc C/C_0 of 0.30). The lead column was rinsed with 4 BV of DI water at 6 BV/hr before shutting down for just over 110 hours (4 1/2 days). The Tc C/C_0 values in the 1 BV samples drop off significantly during this rinse, suggesting that water is not as effective an eluant as the 0.5 M HNO_3.

The ^{95m}Tc C/C_0 of the first sample (3 BV) collected when the acid elution was restarted after the break is the same as the last rinse sample before the break (0.054 and 0.051, respectively). This first sample is mostly rinse water left in the bed during the break. The ^{95m}Tc C/C_0 of the second sample (which should be mostly acid eluant) collected after the break rises dramatically to 0.1. Both the low C/C_0 of the first (water) sample (which had 110 hours to extract Tc from the resin) and the much higher C/C_0 of the second (acid eluant) sample support the initial observation that the acid is a better eluant than water. However, tests by the manufacturer (Bruening, 1999a; Bruening, 1999b) show that DI water at elevated temperature elutes perrhenate (ReO_4^-, a surrogate for TcO_4^-) faster than either acid or water at room temperature.

The Tc C/C_0's dropped an order of magnitude over the next 7 hours of the elution to reach 0.01 (both ^{95m}Tc and ^{99}Tc) at 70 BV of the acid eluant. (The water rinse before the break added 6 BV to the total volume of liquid through the bed.) The flow rate was again 3 BV/hr and samples were collected in 3 BV batches. The columns were then rinsed with 6 BV of DI water at 6 BV/hr, and the rinse effluent was collected in 1 BV increments. The ^{95m}Tc C/C_0 dropped almost two orders of magnitude during this rinse, while the ^{99}Tc C/C_0 dropped only one order of magnitude. This difference is probably due to error in the ^{95m}Tc data, as the count rates were extremely low. The ^{95m}Tc C/C_0 values during the rinse are below the elution cutoff of $C/C_0 = 0.01$. The concentration of ^{99}Tc in the last eluate sample was 0.70 µCi /L (0.041 mg/L) and 0.12 µCi /L (0.007 mg/L) in the last rinse sample.

The eluate samples were combined to produce a 344.2 mL (73.2 BV) composite, and a subsample of this composite was submitted to the analytical laboratory for a number of analyses. The results are shown in Table 3.2. Sodium (Na), at 108 ug/mL or 4.7 mM, was the dominant component found by ICP-AES, and was the only one present above the BNFL specified minimum reportable quantity (MRQ). Other significant components may have leached from the glassware used to hold the samples (Si, B). The total organic carbon was 43 µg C/mL, which falls below the MRQ. Analysis for total inorganic carbon (i.e., carbonate) was not performed, as the eluate was 0.5 M nitric acid and no appreciable inorganic carbon is expected to be found in a solution of this acidity. The MRQ levels for the anionic components determined by IC were met except for F and Cl. The detection limits for these anions were relatively high due to the high nitrate concentration. Nitrate, at 30,600 ug/mL (0.49 M), was the only anion detected. Technetium-99, ^{95m}Tc and ^{90}Sr were the dominant radionuclides, and only ^{99}Tc, at 136 µCi /L (7.98 mg/L), was above the MRQ. The detection limits for all radionuclides not detected were below their MRQ levels. The ^{99}Tc C/C_0 in the eluant composite was found to be 2.13. The $^{95m}TcO_4^-$ C/C_0 was 2.44, as determined using the portable GEA.

Table 3.2. Analysis of Eluant Composite and Minimum Reportable Quantities

ICP Components		**BNFL MRQ**	**Anions and Carbon**		**BNFL MRQ**
	µg/mL	µg/mL		µg/mL	µg/mL
Al	7.46	7.50E+01	TOC	43	1.50E+03
Ba	[0.030]	7.80E+01	TIC	Not determined	1.5E+02
Ca	<0.250	1.50E+02	F	<500	1.5E+02
Cd	<0.015	7.50E+00	Cl	<500	3.0E+00
Co	<0.050	3.00E+01	NO_2	<1000	NMRQ
Cr	1.51	1.50E+01	Br	<500	NMRQ
Cu	<0.025	1.70E+01	NO_3	3.06E+04	3.0E+03
Fe	10.7	1.50E+02	SO_4	<1000	2.3E+03
K	23.8	7.50E+01	PO_4	<1000	2.5E+03
La	<0.050	3.50E+01	C_2O_4	<1000	NMRQ
Mg	[0.13]	1.50E+02			
Mn	[0.15]	1.50E+02			
Mo	<0.050	9.00E+01	Radionuclides		BNFL MRQ
Na	108	7.50E+01		µCi/mL	µCi/mL
Ni	1.34	3.00E+01	Cs -137	6.61E-05	9.00E+00
Pb	<0.100	3.00E+02	Cs -134	<2.E-05	NMRQ
Si	16.7	1.70E+02	Sr-90	1.47E-03	1.50E-01
Sn	<1.500	1.50E+03	Tc-99	1.36E-01	1.50E-03
Ti	<0.025	1.70E+01	Tc-95m	9.76E-02	NMRQ
U	<2.000	6.00E+02	Am-241	<6.E-05	7.20E-04
Zn	[0.12]	1.65E+01	Eu-154	<5.E-06	2.00E-03
B	8.41	NMRQ	Eu-155	<7.E-05	9.00E-02
P	[0.24]	NMRQ	Total Alpha	<2.E-03	2.30E-01

Notes:
Total volume of eluate = 353.5 mL
MRQ = minimum reportable quantity
NMRQ = no minimum reportable quantity
Overall error is estimated to be within +/- 15%
Values in brackets are within 10-times the detection limit and errors are likely to exceed +/- 15%
Tc-95m (61 day half-life) activity measured as of 11/17/99, 3:00 PM PST

Both beds were regenerated with 6 BV of 0.25 M NaOH at a flow rate of 6 BV/hr. The regeneration effluent was collected in one batch. The ^{99}Tc concentration was found to be 0.07 µCi /L (0.004 mg/L), for a C/C_0 of 0.001. The pertechnetate (^{95m}Tc) C/C_0 was found to be 0.002. Results of various analyses of a sample of the regeneration effluent batch are shown in Table 3.3.

Table 3.3. Composition of Regeneration Solution

	Concentration, µg/mL	**Concentration, M**
Na	3226	0.14
K	Not detected	-
Al	3.3	1.2E-4
OH^-	-	0.115
^{99}Tc	0.067 nCi/mL	4.0E-8
Density, g/mL	-	1.005

3.4 Mass Balance for ^{99}Tc and Estimate of ^{99}Tc Remaining on Columns

A mass balance for ^{99}Tc is shown in Table 3.4. Total ^{99}Tc recovery is only 73% since the second column was loaded but not eluted, as discussed in Section 2.1. Even so, the majority (63%) of the ^{99}Tc was found in the eluate stream from the first column.

Table 3.4. Mass Balance for ^{99}Tc

Sample	**^{99}Tc, mg**	**% of ^{99}Tc in Feed Sample**
Feed	4.62	100
Effluent	0.37	7.95
Load Samples	0.04	0.80
Feed Displacement	0.03	0.54
DI Water Rinse	0.01	0.31
Column #1 Eluate	2.92	63.3
Column #1 DI Water Rinse	0.00	0.00
Column #1 Regeneration	0.00	0.00
Total ^{99}Tc Recovered	3.37	72.9

An estimate of the amount of ^{99}Tc left on columns 1 and 2 is given in Table 3.5. The total ^{99}Tc loaded was determined from the ^{99}Tc in the feed sample processed minus the ^{99}Tc in the effluent composite and the effluent samples. The total eluted was taken as the total removed by the feed displacement, the DI rinse, elution, elution rinse, and regeneration. The calculation shows that after regeneration 27% of the Tc originally in the feed sample processed remains on the columns.

The amount of Tc initially loaded on column 1 was estimated by integrating the breakthrough curve, and is shown in the table (with the "calc'd" notation to indicate a calculated value). Subtracting the total eluted gives the amount of ^{99}Tc left on column 1 after elution: 0.28 mg, or 6.1% of that in the feed sample processed. (The error due to elution of the second column by the feed displacement, DI rinse and regeneration should be small.)

An estimate for the amount of ^{99}Tc on column 2 may also be made by subtracting the estimate for column 1 from the total left on both columns. The 0.97 mg estimate is a significant percentage (21%) of the ^{99}Tc in the feed sample.

Table 3.5. Estimates of ^{99}Tc Left on Columns 1 and 2

Source Term	**^{99}Tc, mg**	**% of ^{99}Tc in Feed Sample**
Total loaded (both columns)	4.21	91.3
Total eluted	2.96	64.2
Left on columns (both)	1.25	27.1
Loaded on Col 1 (calc'd)	3.24	70.3
Total eluted	2.96	64.2
Left on Col 1	0.28	6.10
Left on Col 2	0.97	21.0

The capacity of SL-639 for Tc-99 when loading from the AW-101 feed used is calculated as approximately 2.5 mg Tc-99 per gram of dry resin.

4.0 CONCLUSIONS AND RECOMENDATIONS

- Small column testing with SL-639 indicates that sufficient ^{99}Tc decontamination of Tank 241-AW-101 (Envelope A) waste can be obtained to easily meet the LAW glass limit of 0.1 Ci/m^3. An overall DF of 12.6 was obtained using two 4.7 mL columns in series, providing an effluent with 5.1 µCi /L (0.298 mg/L) ^{99}Tc. This is less than 1/5 the expected maximum allowed concentration needed to meet the LAW glass ^{99}Tc limit of 0.1 Ci/m^3.

- The maximum pertechnetate DFs for the first and second columns were 180 and 433, as determined from the C/C_0 of the ^{95m}Tc pertechnetate tracer in the first samples taken from the columns (after approx. 10 BV). The overall pertechnetate DF, determined from the C/C_0 of ^{95m}Tc for a sample of the effluent composite, was 24.4.

- The maximum ^{99}Tc DFs for the first and second columns were 31 and 35, as determined from the C/Co of ^{99}Tc in the first samples taken from the columns at 10 BV. The ^{99}Tc DFs are much lower than the corresponding $^{95m}TcO_4^-$ DFs; the difference is attributed to non-pertechnetate ^{99}Tc in the sample.

- The feed displacement (0.1 M NaOH) volume of 8.5 BV followed by the 6 BV DI water rinse was sufficient to adequately flush feed and residual caustic from the columns prior to the start of elution. The concentrations of feed components dropped by 85% during the feed displacement, and by another 85% during the DI water rinse. While these volumes are larger than the assumed flow sheet volumes, it should be noted that the test system has a total system holdup in the pumps, valves and tubing equal to at least 3 bed volumes of resin. A smaller holdup volume would likely allow a reduction in the required amount of feed displacement and DI water rinse solutions. The DI water rinse was observed to elute Tc. Therefore it is recommended that the DI water rinse be terminated at a volume equal to the system holdup (3 - 4 BV for the system used in these tests).

- Elution of the technetium-loaded columns with 0.5 M nitric acid was very slow. The concentration of ^{99}Tc peaked in the 16th BV at $C/C_0 = 7.4$. A total of 70 BV were required to reach the elution end point of $C/C_0 = 0.01$. Testing of elution with DI water or nitric acid at elevated temperature is recommended to determine if this will increase the elution rate.

- The SL-639 was regenerated with 6 BV of 0.25 M NaOH. The regeneration effluent was collected in one batch, in which the ^{99}Tc concentration was found to be 0.07 µCi /L.

- Fouling of the resin bed or exchanger was not observed.

5.0 REFERENCES

Blanchard, D.L., G.N. Brown, S.D. Conradson, S.K. Fadeff, G.R. Golcar, N.J. Hess, G.S. Klinger, and D.E. Kurath, 1997. *Technetium in Alkaline, High-Salt, Radioactive Tank Waste Supernate: Preliminary Characterization and Removal.* PNNL-11386, January 1997, Pacific Northwest National Laboratory, Richland, Washington.

Blanchard Jr., D.L., W.E. Lawrence, D.E. Kurath, and G.R. Golcar, 2000a. *Technetium Removal from Hanford Tank Wastes: Results of Ion Exchange and Sorption Tests.* PNNL-xxxx, Pacific Northwest National Laboratory, Richland, Washington. (In preparation.)

Blanchard Jr., D.L., D.E. Kurath, and B.M. Rapko, 2000b. *Small Column Testing of SuperLig 639 for Removing ^{99}Tc from Hanford Tank Waste Envelope C (Tank 241-AN-107).* PNNL-3028, Pacific Northwest National Laboratory, Richland, Washington.

Brooks, K.P., P.R. Bredt, G.R. Golcar, S.A. Hartley, M.W. Urie, J.M. Tingey, K.G. Rappe, and L.K. Jagoda, 1999, *Ultrafiltration and Characterization of AW-101 Supernatant and Entrained Solids*, April 1999, BNFL-RPT-002, Pacific Northwest National Laboratory, Richland, Washington.

Bruening, R.L., 1999a. *Initial Report to Dr. J.D. McKinney, BNFL, on Tasks 1 – 5.* IBC Advanced Technologies, Inc, American Fork, Utah.

Bruening, R.L., 1999b. *Final Report to Dr. J.D. McKinney, BNFL, on Phase A ReO_4^- Work.* IBC Advanced Technologies, Inc, American Fork, Utah.

Buckingham, J.S., 1967. *Waste Management Technical Manual.* ISO-100 DEL, Hanford Atomic Products Operation, Richland, Washington.

Hassan, N.M., and D.J. McCabe, 1997. *Hanford Envelope A Tank Waste Ion Exchange Column Study.* SRTC-BNFL-019, Rev 0. Savannah River Technology Center, Westinghouse Savannah River Co. Aiken, South Carolina.

King, W.D., D.J. McCabe, and N.M. Hassan, 2000. *Evaluation of SuperLig 639 Resin for the Removal of Rhenium from Hanford Envelope A Simulant.* BNF-003-098-0140, Rev 0. Savannah River Technology Center, Westinghouse Savannah River Co. Aiken, South Carolina.

Kurath D.E., D.L. Blanchard, and J.R. Bontha, 1999a. *Small Column Ion Exchange Testing of SuperLig 644 for Removal of Cs-137 from Hanford Tank Waste Envelope A (241-AW-101).* PNWD-3001, Battelle, Pacific Northwest Division, Richland, Washington.

Kurath D.E., D.L. Blanchard, and J.R. Bontha, 1999b. *Ion Exchange Distribution Coefficients for ^{137}Cs and ^{99}Tc removal from Hanford Tank Supernatants AW-101 (Envelope A) and AN-107 (Envelope C).* PNWD-2467, Battelle, Pacific Northwest Division, Richland, Washington.

Johnson, M.E., 1999. *River Protection Project Ion Exchange Test Specification*. TSP-W375-99-00013, BNFL Inc., Richland, Washington.

Schroeder, N. C., S. D. Radzinski, J. R. Ball, K. R. Ashley, S. L. Cobb, B. Cutrell, and G. Whitener. 1995. *Technetium Partitioning for the Hanford Tank Waste Remediation System: Anion Exchange Studies for Partitioning Technetium From Synthetic DSSF and DSS Simulants and Actual Hanford Waste (101-SY and 103-SY) Using Reillex™-HPQ Resin*. LA-UR-95-4440, Los Alamos National Laboratory, Los Alamos, New Mexico.

Urie, M.W., J.J. Wagner, L.R. Greenwood, O.T. Farmer, S.K. Fiskum, R.T. Ratner, and C.Z. Soderquist, 1999. *Inorganic and Radiochemical Analysis of AW-101 and AN-107 "Diluted Feed" Materials.* PNWD-2463, Battelle, Pacific Northwest Division, Richland, Washington.

APPENDIX A

Appendix A: Sample Identification

Sample ID	Description
A1-Tc-0	Initial feed sample
A1-Tc-L1 through L14	Loading samples from lead column
A1-Tc-P1 through P7	Loading samples from lag column
AW-101 Tc IX Effluent – 1	Effluent composite container
A1-Tc-PW1 through PW7	Feed displacement samples
A1-Tc-PR1 through PR6	DI water rinse samples
A1-Tc-E1-1 through E1-32	Lead column eluate samples before break (1-23 @ 1BV/hr, 24-32 @ 3 BV/hr)
A1-Tc-E1-R1 through R4	Lead column eluant rinse samples before break
A1-Tc-E1-R5	First eluant sample after break (mostly water)
A1-Tc-E1-33 through E1-39	Lead column eluate samples after break (all @ 3 BV/hr)
A1-Tc-E1-R6 through R11	Lead column eluant rinse samples after break
A1-Tc-RN01, Regen Comp	Regeneration effluent composite samples

Distribution

No. of Copies		
OFFSITE		
1	R. Bruening IBC Technologies 856 E. Utah Valley Drive American Fork, UT 84003	
1	P. McGinnis Oak Ridge National Laboratory PO Box 2008 Oak Ridge, TN 37831-6273	
1	B. Moyer Oak Ridge National Laboratory PO Box 2008 Oak Ridge, TN 37831	
1	N. C. Schroeder Los Alamos National Laboratory PO Box 1663 MSIN J514 CST11 Los Alamos, NM 87545	

No. of Copies		
ONSITE		
5	British Nuclear Fuels, Limited	
	M. E. Johnson (4)	BN-FL
	A. Thompson	BN-FL
13	Pacific Northwest National Laboratory	
	D. L. Blanchard Jr. (2)	P7-25
	J. R. Bontha	K6-24
	D. E. Kurath (2)	P7-28
	E. V. Morrey	P7-28
	Information Release Office (7)	K1-06

APPENDIX A

Appendix A: Sample Identification

Sample ID	Description
A1-Tc-0	Initial feed sample
A1-Tc-L1 through L14	Loading samples from lead column
A1-Tc-P1 through P7	Loading samples from lag column
AW-101 Tc IX Effluent – 1	Effluent composite container
A1-Tc-PW1 through PW7	Feed displacement samples
A1-Tc-PR1 through PR6	DI water rinse samples
A1-Tc-E1-1 through E1-32	Lead column eluate samples before break (1-23 @ 1BV/hr, 24-32 @ 3 BV/hr)
A1-Tc-E1-R1 through R4	Lead column eluant rinse samples before break
A1-Tc-E1-R5	First eluant sample after break (mostly water)
A1-Tc-E1-33 through E1-39	Lead column eluate samples after break (all @ 3 BV/hr)
A1-Tc-E1-R6 through R11	Lead column eluant rinse samples after break
A1-Tc-RN01, Regen Comp	Regeneration effluent composite samples

Testing of SL-639 with AW-101 feed for Tc removal.

Tc-95m tracer used to follow progress of various process steps.

Loading

Start Date and Time:	6/29/99	9:00
Bed volume col 1=	4.7	mL
Bed volume col 2=	4.7	mL
Empty Eff Btl w/ cap(w / hole) =	665.4	g
Bed volumes diverted to waste =	1.8	BV
Supernate Density =	1.228	(g/ml)

Feed analyses: Tc-99, uCi/mL

Tracer: Tc-95m, activity at various times given in table.

Pump Speed: 60 (approx 30 mL/hr or 6 CV/hr)

The effluent volumes on which the bed volumes are based were determined by determining the total mass and calculating the volume of waste pumped through the columns at the time of sampling. For column #1 this includes the mass of the waste in the effluent bottle + the samples taken from column # 1 and # 2 prior to the sample of interest (the mass of the effluent bottle was recorded during each sample event). For column # 2 the effluent volume includes the mass of the waste in the effluent bottle + the samples taken from column #2 prior to the the sample of interest (samples taken from column # 1 did not go through column # 2.

The system holdup is estimated to be 2 BV to the sample valve for the 1st column, and 3 BV to the sample valve for the 2nd column. The effluent was diverted into the waste jug for 10 minutes with the pump set at 50 mL/hr (controller set at 99) at the start of the loading cycle to flush out the holdup volume. The mass of effluent from this step was not determined, but from the pump speed and the duration, it must have been approx 8.3 mL = 1.8 BV. So given the estimates for the holdup, the BV scale should be about right for the 1st column samples, and 1 BV too high for the 2nd column samples.

Vial	dose rate, column 1 mRem/hr	Sample date	sample time (hr:mm:s)	elapsed time (hr)	sample vial + cap (tare) g	mass of sample + vial + cap g	sample mass counted g	sample volume counted mL	Count date	Count start time (*)	file name	count time min	gross counts	Net counts	back ground	Tot cts-bck
A1-Tc-0		6/29/99	9:00:00	0.000	16.8532	23.0428	6.1896	5.0404	06/29/99	13:20:59	A1TcF01	5	53215	45247	0	45247
A1-Tc-0 (Ct only)					16.8532	23.0428	6.1896	5.0404	06/30/99	12:02:48	A1TcF02	5	54298	46476	0	46476
A1-Tc-0 (Ct only)					16.8532	23.0428	6.1896	5.0404	06/30/99	22:22:44	A1TcF0R	15	160680	137072	0	137072
A1-Tc-0 (Ct only)					16.8532	23.0428	6.1896	5.0404	07/01/99	6:39:22	A1TcF03	5	52982	45059	0	45059
A1-Tc-L1		6/29/99	10:45:30	1.758	16.5044	18.9227	2.4183	1.9693	06/29/99	13:31:39	A1TcL01	5	1860	98	0	98
A1-Tc-L2		6/29/99	14:32:00	5.083	16.2144	18.5044	2.2900	1.8648	06/29/99	13:47:30	A1TcL02	5	2273	730	0	730
A1-Tc-L3	4.5	6/29/99	17:53:00	8.433	16.4306	18.7387	2.3081	1.8796	06/29/99	19:09:44	A1TcL03	5	3345	1517	0	1517
A1-Tc-L4	7	6/29/99	21:12:00	11.750	16.2770	18.6027	2.3257	1.8939	06/29/99	19:50:20	A1TcL04	5	4350	2341	0	2341
A1-Tc-L5	7	6/29/99	0:32:00	15.083	16.2484	19.1054	2.8570	2.3265	06/29/99	23:09:07	A1TcL05	10	13060	8501	0	8501
A1-Tc-L6	7	6/30/99	3:52:00	18.417	16.3493	18.7523	2.4030	1.9568	06/30/99	2:28:26	A1TcL06	5	6633	4569	0	4569
A1-Tc-L7	-	6/30/99	7:16:00	21.817	16.2651	18.6965	2.4314	1.9800	06/30/99	9:03:19	A1TcL07	5	8161	5940	0	5940
A1-Tc-L8	8	6/30/99	10:32:00	25.083	16.3878	18.2649	1.8771	1.5286	06/30/99	8:56:27	A1TcL08	5	7170	4958	0	4958
A1-Tc-L9	-	6/30/99	13:52:00	28.417	16.2774	18.6649	2.3875	1.9442	06/30/99	15:36:27	A1TcL09	5	9734	7382	0	7382
A1-Tc-L10	11	6/30/99	17:12:00	31.750	16.3582	18.7376	2.3794	1.9376	06/30/99	15:44:38	A1TcL10	5	10546	7894	0	7894
A1-Tc-L11	11	6/30/99	20:32:00	35.083	16.5041	18.8904	2.3863	1.9432	06/30/99	19:25:50	A1TcL11	5	11743	9053	0	9053
A1-Tc-L12	12	6/30/99	23:52:00	38.417	16.1449	18.5258	2.3809	1.9388	06/30/99	22:15:14	A1TcL12	5	12279	9526	0	9526
A1-Tc-L13	12	7/1/99	3:12:00	41.750	16.3170	18.6749	2.3579	1.9201	07/01/99	1:44:43	A1TcL13	5	13398	10609	0	10609
A1-Tc-L14	-	7/1/99	4:14:00	42.783	16.2699	19.2995	3.0296	2.4671	07/01/99	3:55:55	A1TcL14	5	15975	12865	0	12865

(*) computer time is incorrect but time just needs to be referenced to time of feed

Vial	Dose Rate column 2 mR/hr	Sample date	sample time (hr:mm:s)	elapsed time (hr)	sample vial + cap (tare) g	mass of sample + vial + cap g	sample mass counted g	sample volume counted mL	Date of counting	Time of counting	file name	count time min	gross counts	Net counts	back ground	net cnts bck
A1-Tc-0		6/29/99	9:00:00	0.000	16.8532	23.0428	6.1896	5.0404	06/29/99	13:20:59	A1TcF01	5	53215	45247	0	45247
A1-Tc-0 (Ct only)					16.8532	23.0428	6.1896	5.0404	06/30/99	12:02:48	A1TcF02	5	54298	46476	0	46476
A1-Tc-0 (Ct only)					16.8532	23.0428	6.1896	5.0404	06/30/99	22:22:44	A1TcF0R	15	160680	137072	0	137072
A1-Tc-P1		6/29/99	10:50:00	1.833	16.3474	18.8926	2.5452	2.0726	06/29/99	13:39:46	A1TcP01	5	1683	43	0	43
A1-Tc-P2	2.5	6/29/99	17:57:00	8.950	16.3012	18.6924	2.3912	1.9472	06/29/99	19:18:29	A1TcP02R	15	1825	318	0	305
A1-Tc-P3	2.5	6/29/99	0:36:00	15.600	16.3423	18.6720	2.3297	1.8971	06/29/99	23:01:33	A1TcP03	15	5761	662	0	662
A1-Tc-P4	3	6/30/99	7:16:15	21.191	16.3094	18.7727	2.4633	2.0059	06/30/99	8:47:35	A1TcP04	5	2206	680	0	680
A1-Tc-P5	3.5?	6/30/99	13:56:00	27.853	16.4021	18.8217	2.4196	1.9704	06/30/99	15:52:06	A1TcP05	5	2814	1226	0	1226
A1-Tc-P6	6	6/30/99	20:36:00	34.520	16.3257	18.7268	2.4011	1.9553	06/30/99	19:18:26	A1TcP06	5	3661	1871	0	1871
A1-Tc-P7	7	7/1/99	3:16	41.187	16.3195	18.8083	2.4888	2.0267	07/01/99	1:52:56	A1TcP07	5	4909	2715	0	2715

	A	R	S	T	U	V	W	X	Y	Z	AA	AB	AC	AD	AE	AF	AG	AH
1	**Testing of SL-639**																	
2	Tc-95m tracer used																	
3																		
4	**Loading**																	
5																		
6																		
7																		
8																		
9																		
10																		
11																		
12																		
13																		
14																		
15																		
16	Vial	counts/g of sample/min	C/Co, Tc-95m	Eff Btl Mass (g)	Effluent Mass+ samples (g)	Eff Vol (mL)	Bed volumes	flow rate BV/hr	flow rate mL/hr	ICP-MS Tc-99 ug/mL	C/Co Tc-99				Tc-99 Conc in Eff Samples ug/mL	Total Tc-99 in Eff Samples ug		
17												Notes					Notes	
18	A1-Tc-0	1462	1.000	665.4	0	0.0	0.0			3.75		Tues AM feed sample count						
19	A1-Tc-0 (Ct only)	1502	1.000									Wed noon feed sample count						
20	A1-Tc-0 (Ct only)	1476	1.000															
21	A1-Tc-0 (Ct only)	1456	1.000															
22																		
23	A1-Tc-L1	8	0.006	722.3	59.3	48.3	10.3	5.8	27.5	0.120	0.032	See S38 for Max DFs			0.12	0.24		
24	A1-Tc-L2	64	0.044	839	180.9	147.3	31.3	6.3	29.8			Down 27 min (11:03-11:30)			0.28	0.52	Interpolated	
25	A1-Tc-L3	131	0.090	955	299.2	243.6	51.8	6.1	28.8	0.436	0.116				0.44	0.82		
26	A1-Tc-L4	201	0.138	1066.6	415.5	338.3	72.0	6.1	28.6						0.63	1.20	Interpolated	
27	A1-Tc-L5	298	0.204	1181.9	533.6	434.6	92.5	6.1	28.9	0.832	0.222				0.83	1.94		
28	A1-Tc-L6	380	0.253	1294.5	651.0	530.1	112.8	6.1	28.7						1.05	2.06	Interpolated	
29	A1-Tc-L7	489	0.325	1408.2	767.1	624.7	132.9	5.9	27.8	1.27	0.339				1.27	2.51		
30	A1-Tc-L8	528	0.352	1520.8	884.0	719.9	153.2	6.2	29.2						1.38	2.11	Interpolated	
31	A1-Tc-L9	618	0.412	1636.5	1002.1	816.1	173.6	6.1	28.8	1.49	0.397				1.49	2.90		
32	A1-Tc-L10	664	0.442	1748.8	1119.2	911.4	193.9	6.1	28.6						1.62	3.13	Interpolated	
33	A1-Tc-L11	759	0.514	1864.5	1237.3	1007.6	214.4	6.1	28.8	1.74	0.464				1.74	3.38		
34	A1-Tc-L12	800	0.542	1978.2	1355.8	1104.1	234.9	6.2	28.9						1.87	3.62	Interpolated	
35	A1-Tc-L13	900	0.610	2095.2	1475.2	1201.3	255.6	6.2	29.2	1.99	0.531				1.99	3.82		
36	A1-Tc-L14	849	0.583	2126.9	1512.4	1231.6	262.0	6.2	29.3						2.02	4.98	Guesstimated	
37		count																
38			From Row 23 data:		Max Tc-95m DF =		180.39		Max Tc-99 DF =		31.25				Total:	33.22	ug	
39																		
40	Vial	net counts/g of sample counted/	C/Co,Tc-95m	Eff Btl Mass (g)	Effluent Mass+ sample (g)	Eff Vol (mL)	Bed volumes	flow rate BV/hr	flow rate mL/hr	ICP-MS Tc-99 ug/mL	C/Co ICP-MS				Tc-99 Conc in Eff Samples ug/mL	Total Tc-99 in Eff Samples ug		
41												Notes						
42	A1-Tc-0	1462	1.000	665.4						3.750	1.000	Tues AM feed sample count						
43	A1-Tc-0 (Ct only)	1502	1.000									Wed noon feed sample count						
44	A1-Tc-0 (Ct only)	1476	1.000															
45																		
46	A1-Tc-P1	3	0.002	722.3	59.4	48.4	10.3	5.6	26.4	0.108	0.029	See S54 for Max DFs			0.11	0.22		
47	A1-Tc-P2	9	0.006	955	294.5	239.9	51.0	5.7	26.9						0.12	0.23	Interpolated	
48	A1-Tc-P3	19	0.013	1181.9	523.8	426.5	90.7	6.0	28.1	0.129	0.034				0.13	0.24		
49	A1-Tc-P4	55	0.037	1408.2	752.5	612.8	130.4	7.1	33.3						0.22	0.44	Interpolated	
50	A1-Tc-P5	101	0.067	1636.5	983.2	800.7	170.4	6.0	28.2	0.312	0.083				0.31	0.61		
51	A1-Tc-P6	156	0.106	1864.5	1213.7	988.3	210.3	6.0	28.1						0.47	0.91	Interpolated	
52	A1-Tc-P7	218	0.148	2095.2	1446.8	1178.2	250.7	6.1	28.5	0.620	0.165				0.62	1.26		
53																		
54			From Row 46 data:		Max Tc-95m DF =		432.694		Max Tc-99 DF =		34.722222				Total:	3.92	ug	

	A	B	C	D	E	F	G	H	I	J	K	L	M	N	O	P	Q
55	**Effluent Composite Analysis**																
56																	
57	Vial	Dose Rate column 2	Sample date	sample time	elapsed time	sample vial + cap (tare)	mass of sample + vial + cap	sample mass counted	sample volume counted	Date of counting	Time of counting	file name	count time	gross counts	Net counts	back ground	net cnts bck
58		mR/hr		(hr:mm:s)	(hr)	g	g	g	mL				min				
59	A1-Tc-0	N/A	6/29/99	9:00:00	0.000	16.8532	23.0428	6.1896	5.0404	06/29/99	13:20:59	A1TcF01	5	53215	45247	0	45247
60	Effluent	N/A	7/21/99	N/A	N/A	N/A	N/A	N/A	5.0000	N/A	N/A	N/A	N/A	N/A	N/A	N/A	N/A
61	A1-Tc-F01	N/A	9/24/99	N/A	N/A	16.8296	41.5158	24.6862	20.1028	09/24/99	9:23:17	A1TCF09	10	22446	16183	0	16183
62	A1-Tc-LC	N/A	9/24/99	N/A	N/A	16.8757	41.4692	24.5935	20.0273	09/24/99	10:27:46	A1TCLC03	90	39042	5939	0	5939
63																	
64																	
65	**Caustic Wash: 0.1 M NaOH**																
66																	
67		Start Date and Time:		7/1/99	4:29												
68		Density of 0.1 M NaOH @ 2!		1.001	g/mL												
69		Pump Speed:		60 (approx 30 mL/hr or 6 CV/hr)													
70	Vial/Bottle	Sample date	sample start time (hr:mm:s)	sample finish time	Sampling time (hr)	mass of vial + cap	mass of vial + cap + sample	mass of waste counted	Vol of Waste Sample	Eff Vol (mL)	Flow Rate, mL/hr	Eff Vol (BV)	Flow Rate, BV/hr	Date of counting	Time of counting	file name	count time, min
71	A1-Tc-0 (Ct only)					16.8532	23.0428	6.1896	5.0404	0.000	0.000	0.00	0.00	07/01/99	6:39:22	A1TcF03	5
72																	
73	A1-Tc-PW1	7/1/99	4:29	4:39	0.167	16.4182	22.9638	6.5456	6.5391	6.54	39.23	1.39	8.35	07/01/99	4:11:12	A1TcPW01	5
74	A1-Tc-PW2	7/1/99	4:39	4:48	0.150	16.2612	21.6758	5.4146	5.4092	11.95	36.06	2.54	7.67	07/01/99	4:21:25	A1TcPW02	5
75	A1-Tc-PW3	7/1/99	4:48	4:59	0.183	16.1506	22.7377	6.5871	6.5805	18.53	35.89	3.94	7.64	07/01/99	4:29:38	A1TcPW03	5
76	A1-Tc-PW4	7/1/99	4:59	5:09	0.167	16.3154	21.8445	5.5291	5.5236	24.05	33.14	5.12	7.05	07/01/99	4:44:43	A1TcPW04	5
77	A1-Tc-PW5	7/1/99	5:09	5:19	0.167	16.8167	22.1591	5.3424	5.3371	29.39	32.02	6.25	6.81	07/01/99	4:52:57	A1TcPW05	5
78	A1-Tc-PW6	7/1/99	5:19	5:29	0.167	16.8529	22.469	5.6161	5.6105	35.00	33.66	7.45	7.16	07/01/99	5:05:55	A1TcPW06	5
79	A1-Tc-PW7	7/1/99	5:29	5:39	0.167	16.9037	21.8615	4.9578	4.9528	39.95	29.72	8.50	6.32	07/01/99	5:18:46	A1TcPW07	5
80								Avg vol:	5.7075								
81																	
82	**DI water rinse**																
83		start date and time		7/1/99	5:40												
84		Pump speed:		60 (approx 30 mL/hr or 6 CV/hr)													
85																	
86	Vial/Bottle	Sample date	sample start time (hr:mm:s)	sample finish time	Sampling time (hr)	mass of vial + cap	mass of vial + cap + sample	mass of waste counted	Vol of Waste Sample	Eff Vol (mL)	Flow Rate, mL/hr	Eff Vol (BV)	Flow Rate, BV/hr	Date of counting	Time of counting	file name	count time, min
87	A1-Tc-0 (Ct only)					16.8532	23.0428	6.1896	5.0404	0.000	0.000	0.00	0.00	07/01/99	6:39:22	A1TcF03	5
88																	
89	A1-Tc-PR1	7/1/99	5:40	5:50	0.167	16.9302	22.0877	5.1575	5.1575	5.16	30.95	1.10	6.58	07/01/99	5:25:18	A1TcPR01	5
90	A1-Tc-PR2	7/1/99	5:50	6:00	0.167	16.8978	21.6727	4.7749	4.7749	9.93	28.65	2.11	6.10	07/01/99	5:33:39	A1TcPR02	5
91	A1-Tc-PR3	7/1/99	6:00	6:10	0.167	16.7558	21.1590	4.4032	4.4032	14.34	26.42	3.05	5.62	07/01/99	5:41:06	A1TcPR03	5
92	A1-Tc-PR4	7/1/99	6:10	6:20	0.167	16.8477	21.6342	4.7865	4.7865	19.12	28.72	4.07	6.11	07/01/99	5:50:10	A1TcPR04	5
93	A1-Tc-PR5	7/1/99	6:20	6:30	0.167	16.9406	22.2643	5.3237	5.3237	24.45	31.94	5.20	6.80	07/01/99	8:27:45	A1TcPR05	5
94	A1-Tc-PR6	7/1/99	6:30	6:40	0.167	16.8598	21.6338	4.7740	4.7740	29.22	28.64	6.22	6.09	07/01/99	8:39:27	A1TcPR06	5
95								Avg vol:	4.8700								
96																	

	A	R	S	T	U	V	W	X	Y	Z	AA	AB	AC	AD	AE	AF	AG	AH
55	**Effluent Composi**																	
56																		
57	Vial	net counts/g of sample counted/	C/Co,Tc-95m	Eff Btl Mass	Effluent Mass+ sample	Eff Vol	Bed volumes	flow rate	flow rate	ICP-MS Tc-99	C/Co	Comp DF,	Comp DF,					
58				(g)	(g)	(mL)		BV/hr	mL/hr	ug/mL	ICP-MS	Tc-99	Tc-95m					
59	A1-Tc-0	1462	1.000	665.4	N/A	N/A	N/A	N/A	N/A	3.750	1.000	N/A	N/A					
60	Effluent	N/A	N/A	N/A	N/A	1178.2	250.7	N/A	N/A	0.298	0.079	12.58389	N/A					
61	A1-Tc-F01	66	1.000	N/A	N/A	N/A	N/A	N/A	N/A	N/A	N/A	N/A	N/A					
62	A1-Tc-LC	3	0.041	N/A	N/A	1178.2	250.7	N/A	N/A	N/A	N/A	N/A	24.4317					
63																		
64																		
65	**Caustic Wash: 0.1**																	
66																		
67																		
68																		
69																		
70	Vial/Bottle	back-ground	Tot Counts	Net Area	net cnts per g of sample per min	net cnts per mL of sample per min	C/Co, Tc-95m	Tc-99, ICP-MS (ug/mL)	C/Co, Tc-99		Tc-99 Conc in Eff Samples	Total Tc-99 in Eff Samples						
71	A1-Tc-0 (Ct only)	0	52982	45059	1456	1788	1.000	3.750	1.000									
72																		
73	A1-Tc-PW1	0	10865	7606	232	233	0.130	0.690	0.184		0.690	4.51						
74	A1-Tc-PW2	0	8871	5999	222	222	0.124				0.681	3.68	Interpolated					
75	A1-Tc-PW3	0	10891	7203	219	219	0.122	0.672	0.179		0.672	4.42						
76	A1-Tc-PW4	0	9275	6476	234	234	0.131				0.623	3.44	Interpolated					
77	A1-Tc-PW5	0	8624	6330	237	237	0.133	0.574	0.153		0.574	3.06						
78	A1-Tc-PW6	0	7866	5314	189	189	0.106				0.567	3.18	Interpolated					
79	A1-Tc-PW7	0	6616	4871	196	197	0.110	0.560	0.149		0.560	2.77						
80																		
81											Total:	25.08	ug					
82	**DI water rinse**																	
83																		
84																		
85																		
86	Vial/Bottle	background	Total counts	Net Area	net cnts per g of sample per min	net cnts per mL of sample per min	C/Co, Tc-95m	Tc-99, ICP-MS (ug/mL)	C/Co, Tc-99	Diff, %		Tc-99 Conc in Eff Samples ug/mL	Total Tc-99 in Eff Samples ug					
87	A1-Tc-0 (Ct only)	0	52982	45059	1456	1788	1.00	3.750	1.000									
88																		
89	A1-Tc-PR1	0	7066	5120	199	199	0.11	0.506	0.135	1.215083		0.506	2.61					
90	A1-Tc-PR2	0	7657	5490	230	230	0.13					0.667	3.18	Interpolated				
91	A1-Tc-PR3	0	8353	6563	298	298	0.17	0.827	0.221	1.322689		0.827	3.64					
92	A1-Tc-PR4	0	10265	7891	330	330	0.18					1.044	4.99	Interpolated				
93	A1-Tc-PR5	0	15509	12050	453	453	0.25	1.260	0.336	1.327037								
94	A1-Tc-PR6	0	33854	29248	1225	1225	0.69											
95																		
96												Total:	14.4	ug				

	A	B	C	D	E	F	G	H	I	J	K	L	M	N	O	P	Q
97	**Elution - 1st Column**																
98																	
99		Start Date and Time:		7/1/99	8:21												
100		Pump speed (start):		11 (approx 5 mL/hr or 1		CV/hr)											
101		diluent and eluant (0.5 M nitric) density @ 25 °C =				1.014	g/mL										
102	Vial/Bottle	Sample date	sample start time (hr:mm:s)	sample finish time	Sampling time (hr)	mass of vial + cap, g	mass of vial + cap + sample, g	Mass of sample, g	Vol of Sample	Eff Vol (mL)	Flow Rate, mL/hr	Eff Vol (BV)	Flow Rate, BV/hr	Date of counting	Time of counting	file name	count time, min
103	A1-Tc-0 (Ct only)					16.8532	23.0428	6.1896	5.0404	0.000	0.000	0.00	0.00	7/1/99	6:39:22	A1TcF03	5
104	A1-Tc-0 (Ct only)					16.8532	23.0428	6.1896	5.0404					7/1/99	12:19:05	A1TcF04	5
105	A1-Tc-0 (Ct only)					16.8532	23.0428	6.1896	5.0404					7/2/99	8:19:54	A1TcF05	5
106	A1-Tc-0 (Ct only)					16.8532	23.0428	6.1896	5.0404					7/7/99	5:21:53	A1TcF06	5
107																	
108	A1-Tc-E1-1	7/1/99	6:41	7:41	1.000	16.9643	22.8229	5.8586	5.7777	5.78	5.78	1.23	1.23	7/1/99	8:50:01	a1tc1e01	5
109	A1-Tc-E1-2	7/1/99	8:06	9:06	1.000	16.8431	22.1519	5.3088	5.2355	11.01	5.24	2.34	1.11	7/1/99	8:58:01	a1tc1e02	5
110	A1-Tc-E1-3	7/1/99	9:06	10:06	1.000	16.8640	21.5584	4.6944	4.6296	15.64	4.63	3.33	0.99	7/1/99	9:07:26	a1tc1e03	5
111	A1-Tc-E1-4	7/1/99	10:06	11:06	1.000	16.8821	21.5941	4.7120	4.6469	20.29	4.65	4.32	0.99	7/1/99	11:36:37	a1tc1e04	5
112	A1-Tc-E1-5	7/1/99	11:06	12:06	1.000	16.9240	21.2043	4.2803	4.2212	24.51	4.22	5.22	0.90	7/1/99	11:43:26	a1tc1e05	5
113	A1-Tc-E1-6	7/1/99	12:06	13:06	1.000	16.7795	21.5623	4.7828	4.7168	29.23	4.72	6.22	1.00	7/1/99	11:50:30	a1tc1e06	5
114	A1-Tc-E1-7	7/1/99	13:06	14:06	1.000	16.8700	21.9727	5.1027	5.0322	34.26	5.03	7.29	1.07	7/1/99	14:49:04	a1tc1e07	5
115	A1-Tc-E1-8	7/1/99	14:06	15:06	1.000	16.7595	22.3180	5.5585	5.4818	39.74	5.48	8.46	1.17	7/1/99	14:59:50	a1tc1e08	5
116	A1-Tc-E1-9	7/1/99	15:06	16:06	1.000	16.9156	22.4207	5.5051	5.4291	45.17	5.43	9.61	1.16	7/1/99	14:41:52	a1tc1e09	5
117	A1-Tc-E1-10	7/1/99	16:06	17:06	1.000	16.8998	22.0637	5.1639	5.0926	50.26	5.09	10.69	1.08	7/1/99	15:29:20	a1tc1e10	5
118	A1-Tc-E1-11	7/1/99	17:06	18:06	1.000	17.0360	21.4885	4.4525	4.3910	54.65	4.39	11.63	0.93	7/1/99	16:39:57	a1tc1e11	5
119	A1-Tc-E1-12	7/1/99	18:06	19:08	1.033	16.9120	21.7621	4.8501	4.7831	59.44	4.63	12.65	0.98	7/1/99	17:28:12	a1tc1e12	5
120	A1-Tc-E1-13	7/1/99	19:08	20:08	1.000	16.7441	21.4833	4.7392	4.6738	64.11	4.67	13.64	0.99	7/1/99	18:27:22	a1tc1e13	5
121	A1-Tc-E1-14	7/1/99	20:08	22:18	0.833	16.8150	20.8809	4.0659	4.0098	68.12	4.81	14.49	1.02	7/2/99	8:27:50	a1tc1e14	5
122	A1-Tc-E1-15	7/1/99	22:18	23:18	1.000	16.8534	21.5418	4.6884	4.6237	72.74	4.62	15.48	0.98	7/2/99	2:59:35	a1tc1e15	5
123	A1-Tc-E1-16	7/1/99	23:18	0:18	1.000	16.6656	21.3797	4.7141	4.6490	77.39	4.65	16.47	0.99	7/2/99	8:34:55	a1tc1e16	5
124	A1-Tc-E1-17	7/2/99	0:18	1:18	1.000	16.8305	21.5678	4.7373	4.6719	82.07	4.67	17.46	0.99	7/2/99	8:41:46	a1tc1e17	5
125	A1-Tc-E1-18	7/2/99	1:18	2:18	1.000	16.9069	21.7336	4.8267	4.7601	86.83	4.76	18.47	1.01	7/2/99	8:51:49	a1tc1e18	5
126	A1-Tc-E1-19	7/2/99	2:18	3:18	1.000	16.8585	21.6108	4.7523	4.6867	91.51	4.69	19.47	1.00	7/2/99	2:51:26	a1tc1e19	5
127	A1-Tc-E1-20	7/2/99	3:18	4:18	1.000	16.7079	21.3900	4.6821	4.6175	96.13	4.62	20.45	0.98	7/2/99	2:43:52	a1tc1e20	5
128	A1-Tc-E1-21	7/2/99	4:18	5:18	1.000	16.9226	21.9600	5.0374	4.9679	101.10	4.97	21.51	1.06	7/2/99	8:03:58	a1tc1e21	5
129	A1-Tc-E1-22	7/2/99	5:18	6:18	1.000	16.9145	22.2955	5.3810	5.3067	106.40	5.31	22.64	1.13	7/2/99	4:38:00	a1tc1e22	5
130	A1-Tc-E1-23	7/2/99	6:18	7:18	1.000	16.9966	22.4677	5.4711	5.3956	111.80	5.40	23.79	1.15	7/2/99	5:40:22	a1tc1e23	5
131	A1-Tc-E1-24	7/2/99	7:20	8:20	1.000	16.8983	30.4297	13.5314	13.3446	125.14	13.34	26.63	2.84	7/2/99	7:50:35	a1tc1e24	5
132	A1-Tc-E1-25	7/2/99	8:20	9:22	1.033	16.9015	31.2079	14.3064	14.1089	139.25	13.65	29.63	2.91	7/2/99	8:10:56	a1tc1e25	5
133	A1-Tc-E1-26	7/2/99	9:22	10:20	0.967	16.9629	30.6240	13.6611	13.4725	152.73	13.94	32.49	2.97	7/2/99	12:06:46	a1tc1e26	5
134	A1-Tc-E1-27	7/2/99	10:20	11:20	1.000	16.7488	30.0158	13.2670	13.0838	165.81	13.08	35.28	2.78	7/2/99	12:15:17	a1tc1e27	5
135	A1-Tc-E1-28	7/2/99	11:20	12:18	0.967	16.8425	30.2694	13.4269	13.2415	179.05	13.70	38.10	2.91	7/2/99	12:23:27	a1tc1e28	5
136	A1-Tc-E1-29	7/2/99	12:18	13:25	1.117	16.9140	32.6045	15.6905	15.4739	194.53	13.86	41.39	2.95	7/2/99	11:48:50	a1tc1e29	5
137	A1-Tc-E1-30	7/2/99	13:25	14:19	0.900	16.9069	29.5409	12.6340	12.4596	206.98	13.84	44.04	2.95	7/2/99	12:40:14	a1tc1e30	5
138	A1-Tc-E1-31	7/2/99	14:19	15:19	1.000	16.8374	31.0484	14.2110	14.0148	221.00	14.01	47.02	2.98	7/2/99	13:42:47	a1tc1e31	5
139	A1-Tc-E1-32	7/2/99	15:19	15:52	0.550	16.7769	24.7880	8.0111	7.9005	228.90	14.36	48.70	3.06	7/7/99	6:32:09	a1tc1e32	5
140	A1-Tc-E1-33	7/7/99	7:35	8:35	1.000	16.8321	31.0153	14.1832	13.9874	242.89	13.99	51.68	2.98	7/7/99	8:03:51	a1tc1e33	5
141	A1-Tc-E1-34	7/7/99	8:35	9:36	1.017	16.7288	31.0254	14.2966	14.0992	256.99	13.87	54.68	2.95	7/7/99	8:11:46	a1tc1e34	5
142	A1-Tc-E1-35	7/7/99	9:36	10:35	0.983	16.9758	31.0864	14.1106	13.9158	270.90	14.15	57.64	3.01	7/7/99	10:02:15	a1tc1e35	5
143	A1-Tc-E1-36	7/7/99	10:35	11:35	1.000	16.8464	30.9639	14.1175	13.9226	284.82	13.92	60.60	2.96	7/7/99	9:55:03	a1tc1e36	5
144	A1-Tc-E1-37	7/7/99	11:35	12:37	1.033	16.7956	31.2968	14.5012	14.3010	299.13	13.84	63.64	2.94	7/7/99	10:55:50	a1tc1e37	5
145	A1-Tc-E1-38	7/7/99	12:37	13:42	1.083	16.7350	32.2637	15.5287	15.3143	314.44	14.14	66.90	3.01	7/7/99	12:01:03	a1tc1e38	5
146	A1-Tc-E1-39	7/7/99	13:42	14:40	0.967	16.7611	30.4659	13.7048	13.5156	327.96	13.98	69.78	2.97	7/7/99	13:44:23	a1tc1e39	5
147																	
148																	

	A	R	S	T	U	V	W	X	Y	Z	AA	AB	AC	AD	AE	AF	AG	AH
97	**Elution - 1st Col**																	
98																		
99																		
100																		
101																		
102	Vial/Bottle	background	Total counts	Net Area	net counts/ g sample/	net cnts per mL of sample per min	C/Co, Tc-95m	Tc-99, ICP-MS (ug/mL)	C/Co, Tc-99	Comments								
103	A1-Tc-0 (Ct only)	0	52982	45059	1456	1788	1.000	3.750	1.000									
104	A1-Tc-0 (Ct only)	0	53547	45441	1468	1803	1.000											
105	A1-Tc-0 (Ct only)	0	52487	44564	1440	1768	1.000											
106	A1-Tc-0 (Ct only)	0	50146	42333	1368	1680	1.000											
107																		
108	A1-Tc-E1-1	0	60778	53207	1816	1842	1.030	5.170	1.379	Sample inadvertently collected after 2nd column. Pump off from 7:41 to 8:06 to check bed 1 fo								
109	A1-Tc-E1-2	0	446677	397578	14978	15188	8.495			This and all subsequent samples collected after 1st column.								
110	A1-Tc-E1-3	0	90840	79590	3391	3438	1.923											
111	A1-Tc-E1-4	0	96641	84823	3600	3651	2.025	9.170	2.445									
112	A1-Tc-E1-5	0	123796	109319	5108	5180	2.873											
113	A1-Tc-E1-6	0	133144	118209	4943	5012	2.780											
114	A1-Tc-E1-7	0	159158	140830	5520	5597	3.104			Pump speed increased to 12 at 1:30 PM.								
115	A1-Tc-E1-8	0	192383	171058	6155	6241	3.461	16.200	4.320									
116	A1-Tc-E1-9	0	215794	191826	6969	7067	3.919											
117	A1-Tc-E1-10	0	224753	199193	7715	7823	4.339											
118	A1-Tc-E1-11	0	224585	199752	8973	9098	5.046			Pump speed decreased to 11.								
119	A1-Tc-E1-12	0	254800	226645	9346	9477	5.256	25.600	6.827									
120	A1-Tc-E1-13	0	264684	234844	9911	10049	5.574											
121	A1-Tc-E1-14	0	243252	215804	10615	10764	6.087			Pump off from 8:19 to 9:39 to check bed for air.								
122	A1-Tc-E1-15	0	295951	264158	11269	11426	6.462											
123	A1-Tc-E1-16	0	304358	271099	11502	11663	6.595	27.900	7.440									
124	A1-Tc-E1-17	0	304920	272137	11489	11650	6.588											
125	A1-Tc-E1-18	0	290916	258838	10725	10875	6.150											
126	A1-Tc-E1-19	0	293937	261649	11011	11166	6.314											
127	A1-Tc-E1-20	0	273257	242884	10375	10520	5.949	15.700	4.187									
128	A1-Tc-E1-21	0	283881	251263	9976	10116	5.721			Pump speed increased to 12 at 4:37 AM.								
129	A1-Tc-E1-22	0	279312	248419	9233	9362	5.295											
130	A1-Tc-E1-23	0	262516	233245	8526	8646	4.889											
131	A1-Tc-E1-24	0	535809	476883	7049	7147	4.042	16.500	4.400	Pump speed increased to 30 at 7:20 AM. Approx 15 mL/hr.								
132	A1-Tc-E1-25	0	413511	367629	5139	5211	2.947											
133	A1-Tc-E1-26	0	296731	264526	3873	3927	2.221											
134	A1-Tc-E1-27	0	222155	196294	2959	3001	1.697											
135	A1-Tc-E1-28	0	140952	124889	1860	1886	1.067	3.590	0.957									
136	A1-Tc-E1-29	0	114014	100767	1284	1302	0.737											
137	A1-Tc-E1-30	0	60610	52495	831	843	0.477											
138	A1-Tc-E1-31	0	47657	41640	586	594	0.336											
139	A1-Tc-E1-32	0	17939	15287	382	387	0.230	1.110	0.296	Last elution sample collected on 7/2/99. Elution rinse samples collected subsequently on 7/2								
140	A1-Tc-E1-33	0	15270	12517	177	179	0.107			First elution sample collected on 7/7/99. Pump speed 30, approx 15 mL/hr.								
141	A1-Tc-E1-34	0	14600	11977	168	170	0.101											
142	A1-Tc-E1-35	0	9148	7091	101	102	0.061											
143	A1-Tc-E1-36	0	5822	4187	59	60	0.036											
144	A1-Tc-E1-37	0	4268	2872	40	40	0.024											
145	A1-Tc-E1-38	0	3411	1913	25	25	0.015											
146	A1-Tc-E1-39	0	2505	1045	15	15	0.009	0.041	0.011									
147																		
148																		

	A	B	C	D	E	F	G	H	I	J	K	L	M	N	O	P	Q
149	**Elution rinse DI water**																
150		Start Date and Time:		7/2/99	15:57												
151		Pump Speed:		60 (approx 30 mL/hr or 6 CV/hr)													
152	Vial/Bottle	Sample Date	sample start time (hr:mm:s)	sample finish time	Sampling time (hr)	mass of vial + cap	mass of vial + cap + sample	Mass of sample	Vol of Sample	Eff Vol (mL)	Flow Rate, mL/hr	Eff Vol (BV)	Flow Rate, BV/hr	Date of counting	Time of counting	file name	count time, min
153	A1-Tc-0 (Ct only)					16.8532	23.0428	6.1896	5.0404	0.000	0.000	0.00	0.00	07/07/99	5:21:53	A1TcF06	5
154	A1-Tc-0 (Ct only)					16.8532	23.0428	6.1896	5.0404					07/08/99	5:49:35	A1TcF07	5
155																	
156	1st rinse - 7/2/99																
157	A1-Tc-E1-R1	7/2/99	15:57	16:07	0.167	16.7912	21.5907	4.7995	4.7995	4.80	28.80	1.02	6.13	07/07/99	6:43:37	not saved	5
158	A1-Tc-E1-R2	7/2/99	16:07	16:17	0.167	16.7268	21.4222	4.6954	4.6954	9.49	28.17	2.02	5.99	07/07/99	6:50:35	not saved	5
159	A1-Tc-E1-R3	7/2/99	16:17	16:27	0.167	16.9852	21.7578	4.7726	4.7726	14.27	28.64	3.04	6.09	07/07/99	6:57:48	not saved	5
160	A1-Tc-E1-R4	7/2/99	16:27	16:37	0.167	16.7851	21.5930	4.8079	4.8079	19.08	28.85	4.06	6.14	07/07/99	7:24:45	not saved	5
161	A1-Tc-E1-R5	7/7/99	6:55	7:35	0.667	16.8606	26.0810	9.2204	9.2204	28.30	13.83	6.02	2.94	07/07/99	7:34:24	not saved	5
162																	
163	2nd rinse - 7/7/99																
164	A1-Tc-E1-R6	7/7/99	14:40	14:50	0.167	16.8815	20.9464	4.0649	4.0649	4.06	24.39	0.86	5.19	07/08/99	6:00:49	A1Tc1R06	5
165	A1-Tc-E1-R7	7/7/99	14:50	15:00	0.167	17.0319	21.6228	4.5909	4.5909	8.66	27.55	1.84	5.86	07/08/99	6:09:53	A1Tc1R07	5
166	A1-Tc-E1-R8	7/7/99	15:00	15:10	0.167	16.8614	21.7121	4.8507	4.8507	13.51	29.10	2.87	6.19	07/08/99	6:19:35	A1Tc1R08	5
167	A1-Tc-E1-R9	7/7/99	15:10	15:20	0.167	16.8737	21.4681	4.5944	4.5944	18.10	27.57	3.85	5.87	07/08/99	6:37:40	A1Tc1R09	5
168	A1-Tc-E1-R10	7/7/99	15:20	15:30	0.167	16.7674	21.7311	4.9637	4.9637	23.06	29.78	4.91	6.34	07/08/99	6:43:54	A1Tc1R10	5
169	A1-Tc-E1-R11	7/7/99	15:30	15:40	0.167	16.9511	21.9388	4.9877	4.9877	28.05	29.93	5.97	6.37	07/08/99	6:50:16	A1Tc1R11	5
170																	
171																	
172	**Elution Composite Analysis**																
173																	
174		Samples composited:					A1-Tc-PR5, A1-Tc-PR6, A1-Tc-E1-1 through -39, and A1-Tc-E1-R1 through -R5.										
175		Composite sample bottle label:					SL639/AW101 Eluate Composite										
176		Density of composite (89.5% 0.5 M HNO3, 10.5% DI water)					1.013	g/mL	(Estimated assuming ideal mixing.)								
177		Volume of composite if no samples were removed:					366.36	mL	77.949	BV							
178		Actual mass of composite:					348.65	g									
179		Est'd actual vol of composite:					344.18	mL	73.229	BV							
180																	
181	Vial	Dose Rate column 2 mR/hr	Sample date	sample time (hr:mm:s)	elapsed time (hr)	sample vial + cap (tare) g	mass of sample + vial + cap g	sample mass counted g	sample volume counted mL	Date of counting	Time of counting	file name	count time min	gross counts	Net counts	back ground	net cnts bck
183	A1-Tc-F01	N/A	9/24/99	N/A	N/A	16.8296	41.5158	24.6862	20.1028	10/01/99	14:49:28	A1TCF10	6	26684	19383	0	19383
184	A1-Tc-EC1	N/A	9/24/99	N/A	N/A	16.7520	37.1562	20.4042	20.1423	10/01/99	14:58:57	A1TcEC01	5	38702	32568	0	32568
185																	
186																	
187																	
188																	
189	**Regeneration - 0.25 M NaOH**																
190		Start Date and Time:		7/9/99	14:55												
191		Pump Speed:		60 (approx 30 mL/hr or 6 CV/hr)													
192		Regeneration and diluent (0.25 M NaOH) density @ 25 °C =					1.008	g/mL									
193	Vial/Bottle	Sample Date	sample start time (hr:mm:s)	sample finish time	Sampling time (hr)	mass of vial + cap	mass of vial + cap + sample	Mass of sample	Vol of Sample	Eff Vol (mL)	Flow Rate, mL/hr	Eff Vol (BV)	Flow Rate, BV/hr	Date of counting	Time of counting	file name	count time, min
194	A1-Tc-0 (Ct only)					16.8532	23.0428	6.1896	5.0404	0.000	0.000	0.00	0.00	07/09/99	14:06:38	A1TcF08	5
195																	
196	Reg Soln	7/9/99	-	-	-	16.8576	22.1407	5.2831	5.2412	5.24	-	1.12	-	07/09/99	15:05:04	A1TcRN01	5
197																	
198								Total Regeneration Effluent Volume:			27.9	mL					
199											5.9	BV					
200																	

	A	R	S	T	U	V	W	X	Y	Z	AA	AB	AC	AD	AE	AF	AG	AH
149	**Elution rinse DI**																	
150																		
151																		
152	Vial/Bottle	background	Total counts	Net Area	net cnts per g of sample per min	net cnts per mL of sample per min	C/Co, Tc-95m	Tc-99, ICP-MS (ug/mL)	C/Co, Tc-99									
153	A1-Tc-0 (Ct only)	0	50146	42333	1368	1680	1	3.750	1.000									
154	A1-Tc-0 (Ct only)	0	49359	41931	1355	1664	1											
155																		
156	1st rinse - 7/2/99																	
157	A1-Tc-E1-R1	0	10254	8362	348	348	0.207	0.702	0.187									
158	A1-Tc-E1-R2	0	6992	5261	224	224	0.133											
159	A1-Tc-E1-R3	0	5814	4097	172	172	0.102											
160	A1-Tc-E1-R4	0	3732	2074	86	86	0.051	0.184	0.049									
161	A1-Tc-E1-R5	0	5819	4211	91	91	0.054											
162																		
163	2nd rinse - 7/7/99																	
164	A1-Tc-E1-R6	0	1501	337	17	17	0.010											
165	A1-Tc-E1-R7	0	1430	236	10	10	0.006											
166	A1-Tc-E1-R8	0	1376	181	7	7	0.004											
167	A1-Tc-E1-R9	0	1306	131	6	6	0.003											
168	A1-Tc-E1-R10	0	1220	1	0	0	0.000											
169	A1-Tc-E1-R11	0	1188	1	0	0	0.000	0.007	0.002									
170																		
171																		
172	**Elution Composite**																	
173																		
174																		
175																		
176																		
177																		
178																		
179																		
180																		
181	Vial	net counts/g of sample counted/	C/Co, Tc-95m	Eff Btl Mass (g)	Effluent Mass+ sample (g)	Eff Vol (mL)	Bed volumes	flow rate BV/hr	flow rate mL/hr	ICP-MS Tc-99 ug/mL	C/Co Tc-99							
182																		
183	A1-Tc-F01	131	1.000	N/A	N/A	N/A	N/A	N/A	N/A	N/A	N/A							
184	A1-Tc-EC1	319	2.439	N/A	N/A	344.18	73.2	N/A	N/A	7.980	2.128							
185																		
186																		
187																		
188																		
189	**Regeneration - 0.2**																	
190																		
191																		
192																		
193	Vial/Bottle	background	Total counts	Net Area	net cnts per g of sample per min	net cnts per mL of sample per min	C/Co, Tc-95m	ICP-MS Tc-99 (ug/mL)	C/Co, Tc-99	Notes								
194	A1-Tc-0 (Ct only)	0	48783	41749	1349	1657	1	3.750	1.000									
195																		
196	Reg Soln	0	1076	92	3	4	0.002	0.004	0.001	Regeneration effluent composite sample								
197																		
198				Total Tc-99 in Regeneration Effluent:				0.1116	ug									
199																		
200																		

	A	B	C	D	E	F	G	H	I	J	K	L	M	N	O	P	Q
201	**Tc-99 Mass Balance**																
202	Total vol of feed processed:		1231.6 mL														
203																	
204	Sample			Tc-99 (ug)		Tc-99 (mg)	% of Tc-99 in Sample	Comments									
205	Feed processed:			4618.40		4.62											
206																	
207	Effluent composite:			367		0.37	7.95%										
208	Effluent samples:			37		0.04	0.80%										
209	Feed Displacement:			25		0.03	0.54%										
210	DI Water Rinse:			14		0.01	0.31%										
211	Elution:			2924		2.92	63.30%	Using total elution composite volume (ie, prior to analytical sample removal) and assuming Tc-99 conc would have been the same.									
212	Elution Rinse:			0		0.00		First rinse (R1 - R5) was included in Elution Comp. Assume Tc-99 in second rinse is negligible.									
213	Regeneration:			0		0.00	0.00%										
214																	
215	Total Tc-99 Recovery:			3367		3.37	72.91%										
216																	
217	Total loaded on both columns:			4214		4.21	91.25%	Feed processed minus Eff comp and Eff samples.									
218	Total eluted:			2963		2.96	64.16%	Sum of Feed Displmt, DI Rinse, Elution, Elution Rinse, and Regeneration									
219	Tc-99 left on columns:			1251		1.25	27.09%	Difference									
220																	
221	Tc-99 loaded on Col 1:			3242		3.24	70.20%	By integration of BT curve; see below.									
222	Total eluted:			2963		2.96	64.16%	Sum of Feed Displmt, DI Rinse, Elution, Elution Rinse, and Regeneration									
223	Tc-99 left on Col 1:			279		0.28	6.04%	Difference. Quite a bit of Tc-99; over 8.6% of capacity for 50% BT when loading AW-101.									
224																	
225	Tc-99 on Col 2:			972		0.97	21.05%	Total loaded minus that on Col 1. Note that this is almost 1/3 capacity for 50% BT when loading AW-101.									
226																	
227																	
228	**Estimate of Tc-99 Loaded on Column 1**																
229																	
230	Area under Col 1 Tc-99 loading curve:			367.1	mL x C/Co			Simple trapezoidal integration, see Kaleidagraph file AW1_99LoadAreas.kg. C/Co for last point was guesstimated.									
231	Total area:			1231.6	mL x C/Co			Total volume times Co/Co									
232	Area above curve (Tc-99 loaded):			864.5	mL x C/Co			Total minus area under curve = Tc-99 loaded on column.									
233	Tc-99 loaded, Col 1:			3241.9	ug =	3.24	70.20%	Area above curve times Co.									
234																	
235	**Estimate of SL-639 Tc-99 Capacity for AW-101 feed**																
236																	
237	Area under Col 1 Tc-99 loading curve, 53% BT:			350.9	mL x C/Co												
238	Total area:			1201.3	mL x C/Co												
239	Area above curve (Tc-99 loaded):			850.4	mL x C/Co												
240	Tc-99 loaded, Col 1, at 53% BT:			3189.0	ug =	3.19											
241	Tc-99 capacity for AW-101:			2773.1	ug/g =	2.77	mg/g dry resin	Assuming total capacity is about twice that at 53%, and dry bed mass is 2.3 g.									

Batch Contacts: AW-101 Contacted with Superlig-639 (SL-639)
Pertechnetate Kds ONLY (from Tc-95m pertechnetate tracer)

Performed 6/21/99 through 6/25/99, as per "BNFL AW-101/Tc Batch Contact Test Instructions", BNFL-TI-29953-044.
The contact solution is a sample of AW-101 described in PNWD-2463, Rev. 1, following Cs decon using SL-644 (PNWD-3001).
The Kd's were determined for a Tc-95m pertechnetate tracer ONLY. Tc-99 Kd's were NOT determined.
Distribution coefficient calculation: Kd = [(C0-C1) / C1] x [V / (M x F)]
Estimates for initial [Tc-99] in S1 and S2 based on spike additions and known [Tc-99] in feed. Details in BNFL-TI-29953-044.
Estimates for final [Tc-99] based on Kd's and using the approximation that only pertechnetate is present.

Density of AW-101 supernate after Cs IX =	1.228	g/mL	(Determined with 25 mL volumetric flask.)
F for SL-639 =	0.77		
Initial [Tc-99] in unspiked feed =	3.90E-05	M	
[NO3] in feed =	1.4	M	

sample	solution mass	solution vol	sample mass counted	Tc-95m counts	exchanger mass	Kd	Initial [Tc-99] (est'd)	Final [Tc-99] (est'd)	Final [NO3]/[Tc-99] (est'd)
	g	mL	g	cnts	g	mL/g	M	M	
2W	6.1871	5.04	-	18181	-	-	3.90E-05	3.90E-05	3.59E+04
2W39-F	6.1979	5.05	5.7702	2742	0.0456	745	3.90E-05	6.31E-06	2.22E+05
2W39-D-F	6.1988	5.05	5.7659	2882	0.0554	577	3.90E-05	6.63E-06	2.11E+05
2W-TcS1	2.5448	2.07	-	7699	-	-	3.76E-04	3.76E-04	3.72E+03
2W39-S1-F	6.2005	5.05	5.7384	2952	0.0503	636	3.76E-04	6.39E-05	2.19E+04
2W39-S1D-F	6.1806	5.03	5.7677	3847	0.048	482	3.76E-04	8.29E-05	1.69E+04
2W-TcS2	2.5913	2.11	-	8122	-	-	1.39E-03	1.39E-03	1.01E+03
2W39-S2-F	6.1844	5.04	5.7439	5460	0.0489	307	1.39E-03	4.22E-04	3.32E+03
2W39-S2D-F	6.1843	5.04	5.8068	5576	0.047	315	1.39E-03	4.26E-04	3.29E+03

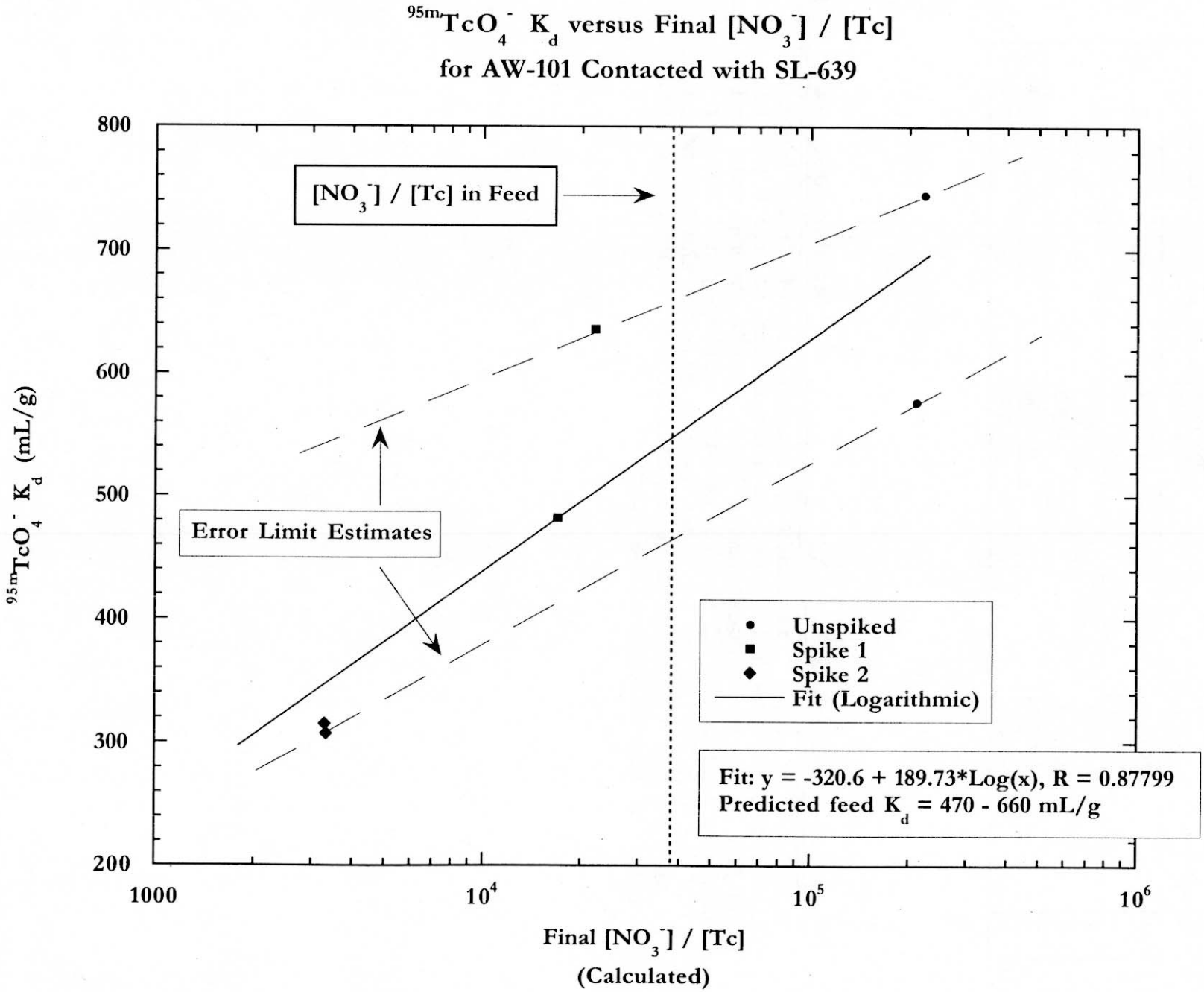
$^{95m}TcO_4^-$ K_d versus Final $[NO_3^-]$ / [Tc]
for AW-101 Contacted with SL-639
$[NO_3^-]$ / [Tc] in Feed
Error Limit Estimates
Unspiked
Spike 1
Spike 2
Fit (Logarithmic)
Fit: y = -320.6 + 189.73*Log(x), R = 0.87799
Predicted feed K_d = 470 - 660 mL/g
$^{95m}TcO_4^-$ K_d (mL/g)
800
700
600
500
400
300
200
1000
10^4
10^5
10^6
Final $[NO_3^-]$ / [Tc]
(Calculated)

	Volume Processed (mL)	Tc-99 C/C_0 from ICP-MS data, Col 1	Area under Col 1 Load Curve ($mL*C/C_0$)
0	0.000000	0.032000	
1	48.41000	~~0~~.032000	
2	243.4600	0.11600	
3	434.7500	0.22200	
4	624.6300	0.33900	
5	815.9200	0.39700	
6	1007.680	0.46400	
7	1201.320	0.53100	350.8555
8	1231.600	0.53900	367.0553

Page #1 - "AW1_99LoadArea.kg" Monday, July 24 4:30 PM 2000

Area shown on line 7 is based on integration of first 7 points.
Area shown on line 8 is based on integration of all 8 points.
The 8th point is a guesstimate based on the Tc-95m data and a rough extrapolation of the Tc-99 data. Probably not too far off.
C/Co for the 1st point is taken as the same as the second point, as this relatively high value is attributed to immediate break-through of non-pertechnetate Tc-99.

Battelle
Pacific Northwest Laboratories

Project Number

Internal Distribution

329/4 File

RECORD COPY

Date July 29, 1999

To Dean Kurath

From Tom Farmer

Subject ICP/MS Analysis of Submitted Samples for Tc-99

Pursuant to your request, the 34 samples that you submitted for analysis were analyzed by ICPMS for ^{99}Tc. The results of this analysis are reported on the attached pages.

An Amersham ^{99}Tc standard was used to generate the calibration curve. An independent Amersham ^{99}Tc was used as the continuing calibration verification (CCV) standard. Unless otherwise specified, the overall uncertainty of the values is conservatively estimated at ±10%, and is based on the precision between consecutive analytical runs as well as the accuracy of the CCV standard results.

The ^{99}Tc values reported assume that the Ru present is exclusively fission-product Ru, and therefore does not have an isotope at m/z 99; i.e., everything observed at m/z 99 is due to ^{99}Tc. The fingerprint we're seeing for Ru is obviously not natural, and is consistent with that observed in previous tank waste analyses. Approximate ^{101}Ru concentrations are provided for your information.

If you have any questions regarding this analysis, feel free to call me at 372-0700 or James Bramson at 372-0624.

J. Benson 7/27/99

Dean Kurath Tc-99 Analysis

July 28, 1999

Results are reported in µg analyte/ml (ppm) of solution submitted.
The uncertainty of the results is estimated at ±10%.

Sample Number	ICP/MS Number	Tc-99 µg/ml	*Ru-101 µg/ml
1%HNO3	9727a1	<0.0001	
1%HNO3	9727a23	<0.0001	
1%HNO3	9727a40	<0.0001	
1%HNO3	9727a56	<0.0001	
A1-Tc-0	9727a10	3.75	0.8
A1-Tc-L1	9727a20	0.120	0.6
A1-Tc-L1 Dup.	9727a30	0.12±0.03	0.6
A1-Tc-L3	9727a24	0.438	0.7
A1-Tc-L3 Dup.	9727a48	0.434	0.7
A1-Tc-L5	9727a25	0.832	0.7
A1-Tc-L7	9727a26	1.27	0.7
A1-Tc-L9	9727a27	1.49	0.7
A1-Tc-L11	9727a28	1.74	0.7
A1-Tc-L13	9727a29	1.99	0.7
A1-Tc-P1	9727a36	0.108	0.6
A1-Tc-P3	9727a37	0.129	0.7
A1-Tc-P5	9727a38	0.312	0.6
A1-Tc-P7	9727a39	0.620	0.6
A1-Tc-PW1	9727a49	0.690	0.6
A1-Tc-PW3	9727a32	0.672	0.6
A1-Tc-PW5	9727a31	0.574	0.3
A1-Tc-PW7	9727a50	0.560	0.09
A1-Tc-PR1	9727a53	0.506	0.04
A1-Tc-PR3	9727a51	0.827	0.01
A1-Tc-PR5	9727a52	1.26	0.01
A1-Tc-E1-1	9727a12	5.17	0.2
A1-Tc-E1-1 + Spike	9727a55	11.5	
Spike Recovery		**113%**	
A1-Tc-E1-4	9727a15	9.17	0.05
A1-Tc-E1-8	9727a17	16.7	0.2
A1-Tc-E1-8 Dup.	9727a54	15.7	0.02
A1-Tc-E1-12	9727a18	25.6	0.08
A1-Tc-E1-16	9727a14	27.9	0.05
A1-Tc-E1-20	9727a21	15.7	0.08
A1-Tc-E1-20 + spike	9727a22	30.4	0.1
Spike Recovery		**118%**	

*Based on Response of Indium

DATA REVIEW

Reviewed by: Paul Thomas Farmer III

Date: 9 Aug 99 Pages: 1 of 2

J C Bruno
7/27/99

Dean Kurath Tc-99 Analysis

July 28, 1999

Results are reported in µg analyte/ml (ppm) of solution submitted.
The uncertainty of the results is estimated at ±10%.

Sample Number	ICP/MS Number	Tc-99 µg/ml	*Ru-101 µg/ml
A1-Tc-E1-24	9727a13	16.5	0.04
A1-Tc-E1-28	9727a43	3.59	0.01
A1-Tc-E1-32	9727a16	1.11	<0.01
A1-Tc-E1-39	9727a44	0.041±0.005	<0.01
A1-Tc-E1-R1	9727a47	0.702	<0.01
A1-Tc-E1-R4	9727a45	0.184	<0.01
A1-Tc-E1-R11	9727a57	0.007±0.001	<0.01
Effluent	9727a9	0.298	0.7
Reg Soln	9727a8	0.00393	<0.01
5ppb Tc-99	9727a4	5.08	
5ppb Tc-99	9727a41	4.51	
10ppb Tc-99	9727a19	10.6	
15ppb Tc-99	9727a58	16.2	

*Based on Response of Indium

DATA REVIEW

Reviewed by Paul Thomas Farmer III

Date: 9 Aug 99 Pages: 2 of 2

project [illegible]
Task 9
File Cat 2.9.3.3
Page 1 of 4

Battelle
Pacific Northwest Laboratories

Project Number

Internal Distribution

329/4 File
LSO Project File
Larry Greenwood

RECORD COPY

Date October 11, 1999

To Dean Kurath

From Tom Farmer

Subject ICP/MS Analysis of Submitted Samples
(ALO#99-2289 through 99-2621)

Pursuant to your request, the 2 samples that you submitted for analysis were analyzed by ICPMS for ^{99}Tc. The results of this analysis are reported on the attached page.

An Amersham ^{99}Tc was used to generate the calibration curve. An independent Amersham ^{99}Tc standard was used as the continuing calibration verification (CCV) standard. Unless otherwise specified, the overall uncertainty of the values is conservatively estimated at ±10%, and is based on the precision between consecutive analytical runs as well as the accuracy of the CCV standard results.

The ^{99}Tc values reported assume that the Ru present is exclusively fission-product Ru, and therefore does not have an isotope at m/z 99; i.e., everything observed at m/z 99 is due to ^{99}Tc. The fingerprint we're seeing for Ru is obviously not natural, and is consistent with that observed in previous tank waste analyses. Approximate ^{101}Ru concentrations are provided for your information.

If you have any questions regarding this analysis, feel free to call me at 372-0700 or James Bramson at 372-0624

J I Brown
9/30/99

Kurath Tc-99 Analysis

September 20, 1999

Results are reported in ng analyte/ml (ppb) of solution submitted.
The uncertainty of the results is estimated at ±10%.

Sample Number	ICP/MS Number	Tc-99 ng/ml	*Ru-101 ng/ml
1%HNO3	9a15a1	<1	
1%HNO3	9a15a6	<1	
1%HNO3	9a15a22	<1	
1%HNO3	9a15a39	<1	
A1-Tc-F	9a15a32	4080	1100
A1-Tc-F Dup.	9a15a33	3860	1000
A1-Tc-F + spike	9a15a38	5680	
Spike Recovery		**86%**	
A1-Cs-E1-Composite	9a15a30	50±6	4
A1-Cs-E1-Composite Dup.	9a15a34	56.5	4
2ppb Tc-99	9a15a4	1.89	
2ppb Tc-99	9a15a40	2.08	
5ppb Tc-99	9a15a21	5.01	
20ppb Co	9a15a41	<1	

*Based on Response of Indium, for information only.

DATA REVIEW

Reviewed by: O.J. Farnell

Date: 30Sep99 Pages: 1 of 1

Date of Report: 9/20/99 **ICP/MS Data Report Cover Sheet** Date of Analysis: 9/15/99

QA IL: I II (III) Default QA Plan: MCS-033 Rev. 5 Default Tech. Procedure: PNL-ALO-280

Additional QAP's or TP's: _____

ALO Sample Numbers: 99-2289 + 99-0261 2621 10-8-99

PM (or Requestor), Company: DEAN KURATH, PNNL

Project #: 29953 WP #: W48413, W48409

LRB(s) (Include page #): 56923 pg 35; 56922 pp 40, 41 pg 3 9/20/99

M&TE Used (Check all that apply)

√	Item	329 Bldg Room #	ID #	Calib.	Frequency	LRB
✓	VG ICP/MS PQI	130	WB36913	By User	Before Use	
	VG ICP/MS PQII+	129	WB62779	By User	Before Use	
	Rainin Elec Pipet 1-10 ml	129	D21825	By User	6 mos / Before Use	
	Rainin Elec Pipet 1-10 ml	129	E18077	By User	6 mos / Before Use	
✓	Rainin Elec Pipet 1-10 ml	130	J21956	By User	6 mos / Before Use	
	Rainin Elec Pipet 100-1000 µl	129	H30300	By User	6 mos / Before Use	
	Rainin Elec Pipet 100-1000 µl	129	H30083	By User	6 mos / Before Use	
	Rainin Elec Pipet 100-1000 µl	130	B302820	By User	6 mos / Before Use	
	Rainin Elec Pipet 100-1000 µl	129	C400507	By User	6 mos / Before Use	
✓	Rainin Elec Pipet 100-1000 µl	130	I024651	By User	6 mos / Before Use	
	Rainin Elec Pipet 25-100 µl	129	D403005	By User	6 mos / Before Use	
	Rainin Elec Pipet 25-100 µl	130	C210852	By User	6 mos / Before Use	

Standards Used (See LRB # SEE PREP SHEET **)**

[✓] See Sample / Standard Preparation Worksheet

	DATA PACKAGE CHECKLIST	SIGNED & DATED		PAGE NUMBERS		HAND CALCS DESC., SIGN, DATE	
1	COVER SHEET	•	✓				
2	COVER LETTER	•	✓				
3	DATA SUMMARY	•	✓	•	✓	•	✓
4	RAWDATA	•	✓	•	✓	•	✓
5	INTDATA	•	✓	•	✓		
6	PROCEDURE FILE	•	✓	•	✓		
7	ELEMENT MENU	•	✓	•	✓		
8	SAMPLE LOG-IN LRB COPIES *	•	NA				
9	ICP/MS LOG LRB COPIES*	•	NA				
10	STD PREP/CALIB. LRB COPIES *	•	NA				

*Impact level 1 and 2 only.

J. Thomson 9/20/99 1 page

ICP/MS Number	Sample Number	In-115 Cts	Ru-101 Cts	Ru-102 Cts	Ru-101/Ru-102	[Ru-101] no dilution	dilution	[Ru-101] w/dilution (ng/ml)
9a15a30	A1-Cs-E1-Composite	208076	75	76	0.9868	0.0360445	100	4
9a15a32	A1-Tc-F	168252	1857	1631	1.1386	1.1037016	1000	1104
9a15a33	A1-Tc-F	173908	1773	1876	0.9451	1.0195046	1000	1020
9a15a34	A1-Cs-E1-Composite	196958	70	91	0.7692	0.0355406	100	4

7

project 29953
Tab 9
T2.9.3.3 page 1 of 7

Battelle PNNL/325 Bldg/RPG/Inorganic Analysis ...
ICPAES Data Report

Project: 29953
Client: D. E. Kurath

RECORD COPY

ACL Number(s): 99-2276 through 99-2284

Client ID: "A1-Tc-0" through "regeneration"

ASR Number: 5461

Total Samples: 9

Procedure: PNL-ALO-211, "Determination of Elements by Inductively Coupled Argon Plasma Atomic Emission Spectrometry" (ICP-AES).

Analyst: J. J. Wagner

Analysis Date (Filename): 08-03-99 (A0537)

See Chemical Measurement Center 98620: ICP-325-405-1 File for Calibration and Maintenance Records.

M&TE Number: ICPAES instrument -- WB73520
Mettler AT400 Balance -- Ser.No. 360-06-01-029

Jerry Wagner 8-30-99
Reviewed by

M O'Hara 8-30-99
Concur

Nine radioactive liquid samples, A1-Tc-0 (ACL# 99-2276) through 'regeneration' (ACL# 99-2284), were analyzed by ICPAES after processing by SRPL using PNL-ALO-128 digestion procedure using plastic labware and diluting to a final volume of approximately 10 to 12.5 ml. The samples were prepared using about 1 ml to 2.5 ml of sample (weighed). After processing the sample aliquots were diluted using 2% v/v nitric acid to a pre-marked position on the plastic vial. After completing the dilution it was observed that some of the sample volumes appeared to be slightly above the mark. Plastic vials used to contain the processed sample were somewhat opaque making it difficult to see the liquid meniscus. The estimated final volume of each processed sample was later determined by observing the liquid level using a strong light. The final volume was noted by comparing a similar vial marked at 0.5 ml increments starting at 10 ml. Because of the way in which the volume was determined the final volume may differ by about 0.5 ml or less resulting in an overall error of 5% or less. The volume error should not affect the reported concentration by more than about 5%.

Sodium was the main analyte of interest requested. Other analytes requested include Al, Ba, Ca, Cd, Co, Cr, Cu, Fe, K, La, Mg, Mn, Mo, Ni, Pb, Si, Sn, Ti, U, and Zn.

All quality control checks met tolerance requirements for analytes of interest except as noted below. Following is a list of quality control check measurement results relative to ICPAES analysis tolerance requirements under MCS-033.

Five fold serial dilution:
(Aqueous samples) -- All results were within tolerance limit of ≤ 10% after correcting for dilution.

Duplicate RPD (Relative Percent Difference):
(Aqueous samples) -- All results were within tolerance limit of ≤ 20%.

Post-Spiked Samples (Group A):
(Aqueous samples) -- All results were within tolerance limit of 75-125% recovery.

Post-Spiked Samples (Group B):
(Aqueous samples) -- All results were within tolerance limit of 75-125% recovery.

Blank Spike:
(Aqueous samples) -- All results were within tolerance limit of 80-120% recovery.

Matrix Spiked Sample:
(Aqueous samples) -- Matrix spike not prepared due to limited sample material.

Quality Control Check Standards:
-- Concentration of all analytes of interest is within tolerance limit of ± 10% accuracy in the standards: QC_MCVA and QC_MCVB. Calibration Blank (ICP98.0) concentration was less than two times IDL.

High Calibration Standard Check:
-- Verification of the high-end calibration concentration for all analytes of interest is within tolerance of ± 5% accuracy except for potassium and uranium determination at the end of the analytical measurement run. Potassium measured +6.7% high and uranium measured –5.9% low in check standard QC_SST.

Process Blank:
(Aqueous samples) -- Sodium and calcium were the only analytes measured that was above detection limit in the process blank. Both analytes were within acceptable tolerance limit of < EQL and < 5% of sample concentration.

Laboratory Control Standard (LCS):
(Aqueous samples) -- None prepared.

Analytes other than those requested by the client are for information only. Please note bracketed values listed in the data report are within ten times instrument detection limit and have a potential uncertainty much greater than 15%. See attached ICPAES data results.

Comments:

1) "Final Results" have been corrected for all laboratory dilution performed on the sample during processing and analysis unless specifically noted.

2) Detection limits (DL) shown are for acidified water. Detection limits for other matrices may be determined if requested.

3) Routine precision and bias is typically ± 15% or better for samples in dilute, acidified water (e.g. 2% v/v HNO_3 or less) at analyte concentrations greater than ten times detection limit up to the upper calibration level. This also presumes that the total dissolved solids concentration in the sample is less than 5000 µg/mL (0.5 per cent by weight).

4) Absolute precision, bias and detection limits may be determined on each sample if required by the client.

5) The maximum number of significant figures for all ICP measurements is 2.

Battelle PNNL/RPG/Inorganic Analysis ... ICPAES Data Report

	Multiplier=	4.8	46.6	48.7	18.6	19.4
	ALO#=	99-2276-BL	99-2276 @5	99-2276-D @5	99-2277 @5	99-2278 @5
	Client ID=	Process Blank	A1-Tc-0	A1-Tc-0	A1-Tc-PW1	A1-Tc-PW3
Det. Limit	Run Date=	8/3/99	8/3/99	8/3/99	8/3/99	8/3/99
(ug/mL)	(Analyte)	ug/g	ug/g	ug/g	ug/g	ug/g
0.015	Ag	--	--	--	--	--
0.060	Al	--	10,500	10,300	9,810	10,800
0.080	As	--	[7.3]	[8.4]	[7.3]	[8.2]
0.050	B	--	37.0	36.7	31.0	35.0
0.010	Ba	--	--	--	--	--
0.010	Be	--	[0.87]	[0.86]	[0.81]	[0.89]
0.100	Bi	--	--	--	--	--
0.100	Ca	[1.1]	[8.0]	[8.0]	[6.5]	[7.3]
0.015	Cd	--	[1.5]	[1.5]	[1.4]	[1.5]
0.100	Ce	--	--	--	--	--
0.025	Co	--	--	--	--	--
0.020	Cr	--	38.3	38.0	35.6	38.9
0.015	Cu	--	[1.1]	[1.3]	[1.9]	[2.1]
0.050	Dy	--	--	--	--	--
0.100	Eu	--	--	--	--	--
0.025	Fe	--	[5.6]	[5.6]	5.18	5.41
2.000	K	--	14,500	14,300	13,200	14,500
0.025	La	--	--	--	--	--
0.005	Li	--	--	--	[0.18]	[0.20]
0.100	Mg	--	--	--	--	--
0.005	Mn	--	--	--	--	--
0.030	Mo	--	22.0	21.9	21.0	23.1
0.100	Na	[2.6]	92,300	93,300	82,200	94,000
0.100	Nd	--	--	--	--	--
0.030	Ni	--	[2.5]	[2.6]	[2.5]	[2.7]
0.100	P	--	206	206	196	215
0.060	Pb	--	[19]	[20]	19.0	21.3
0.300	Pd	--	--	--	--	--
0.300	Rh	--	--	--	--	--
0.075	Ru	--	--	--	[2.5]	[2.7]
0.050	Sb	--	--	--	--	--
0.050	Se	--	[3.4]	[4.0]	[3.6]	[3.9]
0.100	Si	--	95.2	95.5	91.6	108
1.000	Sn	--	--	--	[44]	[49]
0.005	Sr	--	--	--	--	--
0.500	Te	--	--	--	--	--
0.800	Th	--	--	--	--	--
0.005	Ti	--	--	--	--	--
0.250	Tl	--	--	--	--	--
2.000	U	--	--	--	--	--
0.015	V	--	--	--	--	--
0.500	W	--	[45]	[44]	[39]	[42]
0.010	Y	--	--	--	--	--
0.020	Zn	[0.31]	[7.4]	[7.6]	5.92	6.57
0.025	Zr	--	[1.5]	[1.8]	[0.52]	[0.57]

Note: 1) Overall error greater than 10-times detection limit is estimated to be within +/- 15%.
2) Values in brackets [] are within 10-times detection limit with errors likely to exceed 15%.
3) "--" indicate measurement is below detection. Sample detection limit may be found by multiplying "det. limit" (far left column) by "multiplier" (top of each column).

Battelle PNNL/RPG/Inorganic Analysis ... ICPAES Data Report

Det. Limit (ug/mL)	Multiplier= / ALO#= / Client ID= / Run Date= / (Analyte)	21.5 / 99-2279 @5 / A1-Tc-PW5 / 8/3/99 / ug/g	4.9 / 99-2280 @1 / A1-Tc-PW7 / 8/3/99 / ug/g	5.0 / 99-2281 @1 / A1-Tc-PR1 / 8/3/99 / ug/g	4.8 / 99-2282 @1 / A1-Tc-PR3 / 8/3/99 / ug/g	4.8 / 99-2283 @1 / A1-Tc-PR5 / 8/3/99 / ug/g
0.015	Ag	--	--	--	--	--
0.060	Al	5,600	1,060	446	138	63.7
0.080	As	[4.1]	[0.71]	--	--	--
0.050	B	27.3	13.5	10.4	12.3	10.4
0.010	Ba	--	[0.054]	[0.052]	[0.086]	[0.068]
0.010	Be	[0.43]	[0.082]	--	--	--
0.100	Bi	--	--	--	--	--
0.100	Ca	[4.7]	[1.4]	[1.2]	[1.5]	[1.4]
0.015	Cd	[0.77]	[0.15]	--	--	--
0.100	Ce	--	--	--	--	--
0.025	Co	--	--	--	--	--
0.020	Cr	20.3	4.05	1.73	[0.56]	[0.27]
0.015	Cu	[1.2]	[0.72]	[0.36]	--	--
0.050	Dy	--	--	--	--	--
0.100	Eu	--	--	--	--	--
0.025	Fe	[2.6]	[0.65]	[0.54]	[0.49]	[0.33]
2.000	K	8,450	1,800	998	417	214
0.025	La	--	--	--	--	--
0.005	Li	--	--	--	--	--
0.100	Mg	--	--	--	--	--
0.005	Mn	--	--	--	--	--
0.030	Mo	11.8	2.36	[0.88]	[0.17]	--
0.100	Na	56,900	11,800	6,410	3,350	2,430
0.100	Nd	--	--	--	--	--
0.030	Ni	[1.4]	[0.33]	--	--	--
0.100	P	122	28.5	12.6	[4.6]	[2.2]
0.060	Pb	[9.1]	[1.0]	[0.30]	--	--
0.300	Pd	--	--	--	--	[2.2]
0.300	Rh	--	--	--	--	--
0.075	Ru	--	--	--	--	--
0.050	Sb	--	--	--	--	--
0.050	Se	[2.1]	--	--	--	--
0.100	Si	73.7	36.6	33.2	41.9	37.5
1.000	Sn	[24]	--	--	--	--
0.005	Sr	--	--	--	--	--
0.500	Te	--	--	--	--	--
0.800	Th	--	--	--	--	--
0.005	Ti	--	--	--	--	--
0.250	Tl	--	--	--	--	--
2.000	U	--	--	--	--	--
0.015	V	--	--	--	--	--
0.500	W	[24]	[4.7]	--	--	--
0.010	Y	--	--	--	--	--
0.020	Zn	[3.6]	[0.94]	[0.59]	[0.56]	[0.44]
0.025	Zr	[1.0]	[0.15]	--	--	--

Note: 1) Overall error greater than 10-times detection limit is estimated to be within +/- 15%.
2) Values in brackets [] are within 10-times detection limit with errors likely to exceed 15%.
3) "--" indicate measurement is below detection. Sample detection limit may be found by multiplying "det. limit" (far left column) by "multiplier" (top of each column).

Battelle PNNL/RPG/Inorganic Analysis ... ICPAES Data Report

Det. Limit (ug/mL)	Multiplier= / ALO#= / Client ID= / Run Date= (Analyte)	5.2 / 99-2284 @1 / regeneration / 8/3/99 / ug/g				
0.015	Ag	--	--	--	--	--
0.060	Al	3.29	--	--	--	--
0.080	As	--	--	--	--	--
0.050	B	13.3	--	--	--	--
0.010	Ba	[0.18]	--	--	--	--
0.010	Be	--	--	--	--	--
0.100	Bi	--	--	--	--	--
0.100	Ca	[3.1]	--	--	--	--
0.015	Cd	--	--	--	--	--
0.100	Ce	--	--	--	--	--
0.025	Co	--	--	--	--	--
0.020	Cr	[0.34]	--	--	--	--
0.015	Cu	--	--	--	--	--
0.050	Dy	--	--	--	--	--
0.100	Eu	--	--	--	--	--
0.025	Fe	[1.1]	--	--	--	--
2.000	K	--	--	--	--	--
0.025	La	--	--	--	--	--
0.005	Li	--	--	--	--	--
0.100	Mg	--	--	--	--	--
0.005	Mn	[0.060]	--	--	--	--
0.030	Mo	--	--	--	--	--
0.100	Na	3,200	--	--	--	--
0.100	Nd	--	--	--	--	--
0.030	Ni	--	--	--	--	--
0.100	P	--	--	--	--	--
0.060	Pb	--	--	--	--	--
0.300	Pd	--	--	--	--	--
0.300	Rh	--	--	--	--	--
0.075	Ru	--	--	--	--	--
0.050	Sb	--	--	--	--	--
0.050	Se	--	--	--	--	--
0.100	Si	68.6	--	--	--	--
1.000	Sn	--	--	--	--	--
0.005	Sr	--	--	--	--	--
0.500	Te	--	--	--	--	--
0.800	Th	--	--	--	--	--
0.005	Ti	--	--	--	--	--
0.250	Tl	--	--	--	--	--
2.000	U	--	--	--	--	--
0.015	V	--	--	--	--	--
0.500	W	--	--	--	--	--
0.010	Y	--	--	--	--	--
0.020	Zn	[0.71]	--	--	--	--
0.025	Zr	--	--	--	--	--

Note: 1) Overall error greater than 10-times detection limit is estimated to be within +/- 15%.
2) Values in brackets [] are within 10-times detection limit with errors likely to exceed 15%.
3) "--" indicate measurement is below detection. Sample detection limit may be found by multiplying "det. limit" (far left column) by "multiplier" (top of each column).

project 2[illegible]
+ wsh 9
+ 2.9.3.3
Page 1 of 1

Battelle PNNL/RPG/Inorganic Analysis --- IC Report

WO/Project: W48412/29953
Client: D. Kurath

ACL Numbers: 99-02276
ASR Number 5461

Results:

Lab ID	Sample ID	F ug/ml	Cl ug/ml	NO_2 ug/ml	Br ug/ml	NO_3 ug/ml	PO_4 ug/ml	SO_4 ug/ml	C_2O_4 ug/ml
99-02276	A1-Tc-0	1,020	2,670	46,500	< 200	92,800	< 400	690	< 400
99-02276 MS	A1-Tc-0 Spike	3.6	3.7	25.0	3.3	37.1	13.6	13.4	13.5
	Spike Recovery	111%	102%	112%	110%	116%	113%	111%	112%

Comments:

All sample and analytical QC was within acceptance criteria; however, no duplicate was provided to assess precision. The sample was analyzed at various analytical dilutions providing RPDs for F, Cl, and NO_2 of 47%, 9%, and 3%, respectively. The NO_3 was measured at only one dilution that provided results within the calibration range. Significant coeluting interferences were prominent at the F and Cl retention times; most likely from organic anions. These interferences make the quantitation of F and Cl difficult, and the reported values should be considered upper bounds for the F and Cl concentrations.

Procedure: PNL-ALO-212, "Determination of Inorganic Anions by Ion Chromatography"
Analyst: MJ Steele
Analysis Date: August 5, 1999

M&TE: IC system (WD25214); Mettler AT400 Balance (360-06-01-031) See Chemical Measurement Center 98620 RIDS for IC File for Calibration, Standards Preparations, and Maintenance Records.

Analyst: MJ Steele 8/26/99
Approval: [illegible] 8/27/99

Notes:

1) "Final Results" have been corrected for all dilution performed on the sample during processing or analysis.
2) The low calibration standards are defined as the estimated quantitation limit (EQL) for the reported results and assume non-complex aqueous matrices. Actual detection limits or quantitation limits for specific sample matrices may be determined, if requested.
3) Routine precision and bias is typically ± 15% or better for non-complex aqueous samples that are free of interference and have similar concentrations as the measured anions.

Project 29953
Task 9
2.9.3.3

Battelle Pacific Northwest Laboratory
Radiochemical Processing Group-325 Building
Radioanalytical Applications Team

ASR # **5461**
WP# **W48412**

File: L:\radchem\hydroxide\asr5461
Analysis Date: **8/2/99**
Print Date: 8/4/99

Hydroxide and Alkalinity Determination
Governing Procedures: **PNL-ALO-228:** Determination of Hydroxyl (OH-) and Alkalinity of Aqueous Solutions, Leachates and Supernates and Operation of Brinkman 636 Auto-Titrator
Equip # **WB76843**
Lab Loc. 525

Analyst: 8/4/99
Reviewer: 8-4-99

Titrant	Molarity
HCl	**0.2034**

Std. & Spike	Molarity
NaOH	**0.1018**

RPG #	Sample ID		Sample Vol. (mL)	Sample Wt. (g)	Density g/mL	Titrator Routine #	Initial pH reading	OH 1st Equivalence Point Titrant Vol. (mL)	OH 1st Equivalence Point pH	Found millimoles base	Molarity base	millimole RPD
99-2277	**1-Tc-PW1**		0.100	0.1193	1.193	4	11.442	0.999	10.496	0.203	2.03	
99-2277	**1-Tc-PW1**	Replicate	0.200	0.2469	1.235	5	12.020	2.02	10.218	0.411	2.05	
99-2277	**1-Tc-PW1**	Replicate	0.200	0.2441	1.221	6	11.998	2.02	10.265	0.411	2.05	1.10%
99-2278	**1-Tc-PW3**		0.200	0.2467	1.234	7	12.187	2.003	10.29	0.407	2.04	
99-2278	**1-Tc-PW3**	Replicate	0.200	0.2388	1.194	8	12.158	2.002	10.362	0.407	2.04	0.05%
99-2279	**1-Tc-PW5**		0.200	0.2236	1.118	9	11.536	1.061	10.055	0.216	1.08	
99-2279	**1-Tc-PW5**	Replicate	0.200	0.2255	1.128	10	11.855	1.081	9.978	0.220	1.10	1.87%
99-2280	**1-Tc-PW7**		0.300	0.3021	1.007	11	11.355	0.309	9.497	0.063	0.21	
99-2280	**1-Tc-PW7**	Replicate	0.500	0.5168	1.034	12	11.648	0.531	9.766	0.108	0.22	3.06%
99-2281	**1-Tc-PR1**		0.500	0.4966	0.993	13	11.320	0.350	9.346	0.071	0.14	
99-2281	**1-Tc-PR1**	Replicate	1.000	1.0091	1.009	14	11.623	0.714	10.039	0.145	0.15	1.98%
99-2282	**1-Tc-PR3**		1.000	0.9963	0.996	15	11.333	0.529	10.227	0.108	0.11	
99-2282	**1-Tc-PR3**	Replicate	0.700	0.7075	1.011	16	11.245	0.362	10.149	0.074	0.11	2.27%
99-2283	**1-Tc-PR5**		1.000	0.9936	0.994	17	11.221	0.426	8.938	0.087	0.09	
99-2283	**1-Tc-PR5**	Replicate	1.000	1.004	1.004	18	11.510	0.420	9.000	0.085	0.09	1.42%
99-2284	**Regenerate**		1.000	0.9905	0.991	19	11.446	0.518	10.378	0.105	0.11	
99-2284	**Regenerate**	Replicate	1.000	1.0097	1.010	20	11.640	0.577	7.931	0.117	0.12	10.78%

Battelle Pacific Northwest Laboratory
Radiochemical Processing Group-325 Building
Radioanalytical Applications Team

ASR # **5461**

WP# **W48412**

File: L:\radchem\hydroxide\asr5461
Analysis Date: **8/2/99**
Print Date: 8/4/99

Hydroxide and Alkalinity Determination
Governing Procedures: **PNL-ALO-228:** Determination of Hydroxyl (OH-) and Alkalinity of Aqueous Solutions, Leachates and Supernates and Operation of Brinkman 636 Auto-Titrator
Equip # **WB76843**
Lab Loc. 525

Analyst: 8/4/99
Reviewer: 8-4-99

Titrant	Molarity
HCl	**0.2034**

Std. & Spike	Molarity
NaOH	**0.1018**

RPG #	Sample ID		Sample Vol. (mL)	Sample Wt. (g)	Density g/mL	Titrator Routine #	Initial pH reading	OH 1st Equivalence Point Titrant Vol. (mL)	pH	Found millimoles base	Molarity base	millimole RPD
QC Data:												
Reag. Blk.			5.00			1	6.143				**OH % Recovery, Acc**	
Standard 1	0.1018 N NaOH		5.000	5.0036	1.001	2	12.026	2.492	7.918	0.5069	**99.6%**	Std 1
Standard 2	0.1018 N NaOH		5.000	5.0196	1.004	3	11.89	2.486	7.578	0.5057	**99.3%**	Std 2
99-2277MS	PW 1 + 2mL 0.1N NaOH		0.100	0.1218	1.218	21	11.922	1.928	10.210	0.392	**92.3%**	MS
99-2278MS	PW 3 + 2mL 0.1N NaOH		0.100	0.121	1.210	22	11.995	1.879	10.244	0.382	**87.7%**	MS
99-2279MS	PW 5 + 2mL 0.1N NaOH		0.200	0.2245	1.123	23	12.123	1.923	10.284	0.391	**85.1%**	MS
99-2280MS	PW 7 + 2mL 0.1N NaOH		0.300	0.2923	0.974	24	11.624	1.208	9.151	0.246	**89.3%**	MS

* -- Volume restrictions existed

Buffer	VWR Lot #	CMS#	Expire Date
10	981659-24	144109	Jul-00
4	981583-24	144107	Jun-00
7	981894-24	144108	Aug-00

Performance checks

Balance # 360--01-06-037

		Vol.	Wt.
Pipet #	H30762	5.00	4.944
Pipet #	2734494	0.500	0.496
Pipet #	120737	0.100	0.1013
Pipet #	120737	0.200	0.1997

Battelle Pacific Northwest Laboratory
Radiochemical Processing Group-325 Building
Radioanalytical Applications Team

ASR # 5461
WP# W48412

File: L:\radchem\hydroxide\asr5461
Analysis Date: **8/2/99**
Print Date: 8/4/99

Hydroxide and Alkalinity Determination
Governing Procedures: PNL-ALO-228: Determination of Hydroxyl (OH-) and Alkalinity of Aqueous Solutions, Leachates and Supernates
and Operation of Brinkman 636 Auto-Titrator
Equip # WB76843
Lab Loc. 525

Analyst: [signature] 8/4/99
Reviewer: [signature] 8-4-99

Titrant	Molarity
HCl	**0.2034**

RPG #	Sample ID		Sample Vol. (mL)	CO3 2nd Equivalence Point Titrant Vol. (mL)	pH	Found millimoles base	Molarity base	millimole RPD	HCO3 3rd Equivalence Point Titrant Vol. (mL)	pH	Found millimoles base	Molarity base	millimole RPD
99-2277	1-Tc-PW1	0	0.100	1.355	6.724	0.072	0.724		1.396	5.238	0.008	0.08	
99-2277	1-Tc-PW1	Replicate	0.200	2.664	7.952	0.131	0.655		2.698	7.067	0.007	0.03	
99-2277	1-Tc-PW1	Replicate	0.200	2.692	7.424	0.137	0.683	5.78%					
99-2278	1-Tc-PW3	0	0.200	2.682	7.345	0.138	0.691		2.808	5.090	0.026	0.13	
99-2278	1-Tc-PW3	Replicate	0.200	2.682	7.393	0.138	0.692	0.15%	2.764	5.644	0.017	0.08	42.3%
99-2279	1-Tc-PW5	0	0.200	1.392	6.550	0.067	0.337		1.433	4.895	0.008	0.04	
99-2279	1-Tc-PW5	Replicate	0.200	1.411	6.100	0.067	0.336	0.30%	1.451	5.053	0.008	0.04	2.47%
99-2280	1-Tc-PW7	0	0.300	0.410	5.323	0.021	0.068						
99-2280	1-Tc-PW7	Replicate	0.500	0.688	6.083	0.032	0.064	6.97%					
99-2281	1-Tc-PR1	0	0.500	0.428	5.529	0.016	0.032						
99-2281	1-Tc-PR1	Replicate	1.000	0.871	6.444	0.032	0.032	0.64%	0.911	4.936	0.008	0.01	
99-2282	1-Tc-PR3	0	1.000	0.608	7.502	0.016	0.016		0.650	4.591	0.009	0.01	
99-2282	1-Tc-PR3	Replicate	0.700	0.429	7.249	0.014	0.019	19.13%	0.464	4.537	0.007	0.01	17.39%
99-2283	1-Tc-PR5	0	1.000	0.446	7.343	0.004	0.004		0.475	4.643	0.006	0.01	
99-2283	1-Tc-PR5	Replicate	1.000	0.432	8.231	0.002	0.002	50.00%	0.480	4.304	0.010	0.01	49.35%
99-2284	Regenerate	0	1.000	0.574	7.933	0.011	0.011		0.607	4.205	0.007	0.01	
99-2284	Regenerate	Replicate	1.000	0.620	4.186	0.009	0.009	26.26%					

Battelle Pacific Northwest Laboratory
Radiochemical Processing Group-325 Building
Radioanalytical Applications Team

ASR # 5461
WP# W48412

File: L:\radchem\hydroxide\asr5461
Analysis Date: 8/2/99
Print Date: 8/4/99

Hydroxide and Alkalinity Determination
Governing Procedures: PNL-ALO-228: Determination of Hydroxyl (OH-) and Alkalinity of Aqueous Solutions, Leachates and Supernates
and Operation of Brinkman 636 Auto-Titrator
Equip # WB76843
Lab Loc. 525

Analyst: [illegible] 8/4/99
Reviewer: [illegible] 8-4-99

Titrant	Molarity
HCl	0.2034

RPG #	Sample ID		Sample Vol. (mL)	CO3 2nd Equivalence Point Titrant Vol. (mL)	pH	Found millimoles base	Molarity base	millimole RPD	HCO3 3rd Equivalence Point Titrant Vol. (mL)	pH	Found millimoles base	Molarity base	millimole RPD
racy							**CO3 % Recovered**						
Standard 1	0.1018 N NaOH		5.000	2.559	4.054	0.01363	0.003	sample					
Standard 2	0.1018 N NaOH		5.000	2.566	3.879	0.01627	0.003	sample			**HCO3 % recovered**		
99-2277MS	PW 1 + 2mL 0.1N NaOH		0.100	2.341	6.99	0.084	**122.2%**	sample	2.450	4.816	0.0222	**563.8%**	sample
99-2278MS	PW 3 + 2mL 0.1N NaOH		0.100	2.306	7.072	0.08685	**125.7%**	sample	2.432	4.738	0.0256	**242.3%**	sample
99-2279MS	PW 5 + 2mL 0.1N NaOH		0.200	2.347	7.096	0.08624	**128.3%**	sample	2.495	4.665	0.0301	**365.4%**	sample
99-2280MS	PW 7 + 2mL 0.1N NaOH		0.300	1.313	7.100	0.02136	**107.6%**	sample	1.441	4.260	0.0260		sample

Matrix spike recovery is calculated as follows:
Spike = 2.00 mL 0.1018 N NaOH was added to the 0..100-mL of sample for each matrix spilke.
SpikeTitrant vol. (sample @ .1mL + spike) - SampleTitrant vol. (average sample only equated to .1mL) * 0.2034 N (HCl titrant) = meq. OH
meq OH / 2.00 mL added = meq OH/mL found / 0.1018 N OH added * 100 = % recovered.

Prep record on 0.2034 M HCl is on following page.

Chem Rec_51a

Prep date: 4/18/99

Preparation of Standardized 0.2 M HCl

WP# K51300

Standardized O.1021 M NaOH will be re-checked and then used to standardized the ~ 0.1 M HCl solution. The 0.1021 M NaOH was prepared in Chem Rec_37 (see Chem Rec_37 --prep.date 2-25-98 for original data) and re-verified against NIST SRM84j Potassium Acid Phthalate KHC8H404 (KAP) = 204.23 g/mole -- Barcode # 52232 --- (see below verification check).
The re-standardized value of 0.1018 M NaOH was reassigned to this NaOH solution with a revised Expiration Date of Feb. 2000.
Prepared 1- liters of ~0.2 M HCl by diluting 100 mL of 1.029M HCl (Chemrec_10) to 0.5 L with DI. H2O.
20 mL aliquots of 0.2 M HCl were were neutralized to the phenopthalien endpoint using the re-standardized 0.1018 M NaOH. The volume of NaOH is accurate to +/- 0.02mL and the pipitting error is estimated to be < 1% @ 1s. Thus total error is < 3 % for the measurements

NaOH Molarity veification

Verification Test #	Wt. of KAP	Vol. of **0.1021M NaOH** to neutralize	NaOH Molarity =a * 1000 / b * 204.23	Molarity Error +/- @ 1 s
1	0.80894	38.95	0.1017	
2	0.80582	38.84	0.1016	
3	0.96233	46.12	0.1022	
		Ave=	**0.1018**	0.0003
			re-certified value	

Titration Id.	aliquot of sample	Vol. of **0.1018M NaOH** to neutralize	**Molarity of Acid** in Sample	Molarity Error +/- @ 1 s
1	20.00	39.88	0.2030	
2	20.00	39.92	0.2032	
3	20.00	40.04	0.2038	
		Ave Molarity HCl =	**0.2034**	0.00042

8/4/99

Analyst/Date

Battelle
Pacific Northwest Laboratories

Project Number

Internal Distribution

329 File
Mike Urie

Date December 22, 1999

To Dean Kurath

From Tom Farmer

Subject ICPMS Analysis BNFL samples
(ALO# 00-00348)

Pursuant to your request, the sample that you submitted for analysis was analyzed on our radioactively-contained ICPMS for the selected analytes. The concentration results for the isotopes of interest are displayed on the attached spreadsheet.

Dilutions of Isotope Products standards for ^{237}Np and ^{239}Pu, an Amersham ^{99}Tc standard were used to generate the calibration curves. Independent standards, from the same vendors, of each analyte were used as the continuing calibration verification (CCV) standards. The 1% high-purity nitric acid solution used to dilute the standards and samples was used as a reagent blank. The results are reported in ng analyte/ ml (ppb) of sample submitted ± one standard deviation.

The ^{99}Tc values reported assume that the Ru present is exclusively fission-product Ru, and therefore does not have an isotope at m/z 99; i.e., everything observed at m/z 99 is due to ^{99}Tc. From the appearance of the Ru isotopic abundance, this appears to be a reasonable assumption; the fingerprint exhibited is obviously not natural.

A uranium hydride interference correction was performed for ^{239}Pu.

If you have any questions regarding this analysis, please give me a call at 372-0700 or James Bramson at 376-0624.

J. Brown
1/10/00

Kurath Analysis

December 22, 1999

Results are reported in ng analyte/ ml of sample submitted.

Sample ID	ICP/MS Number	*^{99}Tc ng/ml	±	1SD	^{237}Np ng/ml	±	1SD	^{239}Pu ng/ml	±	1SD
1%HNO3	9c20a1	0.035±0.005		0.005	<0.03			<0.01		
1%HNO3	9c20a10	<0.024			<0.03			<0.01		
1%HNO3	9c20a45	<0.024			<0.02			<0.008		
00-348	9c20a13	7980	±	210	<0.26			<0.11		
5ppb Tc-99	9c17a4	4.72	±	0.15						
5ppb Tc-99	9c17a19	5.13	±	0.03						
5ppb Tc-99	9c17a52	4.79	±	0.39						
100ppb Co	9c17a53	<0.024								
1ppb Np CCV	9c20a6				0.996	±	0.049			
1ppb Np CCV	9c20a47				0.968	±	0.080			
1ppb Pu CCV	9c20a7							1.02	±	0.09
1ppb Pu CCV	9c20a48							0.979	±	0.013

(Al-Tc-ECI)

*Results are from procedure 9c17a.

DATA REVIEW

Reviewed by C.J. Farmer

Date: 10 Jan 00 Pages: 1 of 1

Battelle PNNL/RPG/Inorganic Analysis --- TOC/TIC Report

Client:	D. Kurath	**Charge Code/Project:**	W48409 / 29953
ACL Numbers:	00-0348	**ASR Number:**	5571
Analyst:	MJ Steele	**Analysis Date:**	December 9, 1999

Procedure: PNL-ALO-381, "Direct Determination of TC, TOC, and TIC in Radioactive Sludges and Liquids by Hot Persulfate Method"

M&TE: Carbon System (WA92040); Balance (360-06-01-023).

Final Results:

Lab Number	Sample ID	Vol (ml)	TIC (ug C/ml)	TIC RPD (%)	TOC (ug C/ml)	TOC RPD (%)
00-0348	A1-Tc-EC1	1.00	n/m		46	
00-0348 Rep	A1-Tc-EC1 Rep	1.00	n/m		40	n/a
00-0348 MS	A1-Tc-EC1 MS Rec	1.00			96%	

RPD = Relative Percent Difference (between sample and duplicate/replicate)

The analysis of the subject samples submitted under ASR 5571 was performed by the hot persulfate wet oxidation method. The hot persulfate method uses acid decomposition for TIC and acidic potassium persulfate oxidation at 92-95°C for TOC, all on the same sample, with TC being the sum of the TIC and TOC. Per the ASR and since the sample is acidic only TOC analyses were performed.

The table above shows the results, rounded to two significant figures. The raw data bench sheets and calculation work sheets showing all calculations are attached. All sample results are corrected for average percent recovery of system calibration standards and are also corrected for contribution from the blank

Q.C. Comments:

The TIC standard is calcium carbonate and TOC standard is α-Glucose (the certificates of purity are attached). The standard materials were used in solid form for system calibration standards as well as matrix spikes (TOC only)

The QC for the methods involves calibration blanks, system calibration standards, sample duplicates, and one matrix spike per matrix type.

Calibration Standards: The QC system calibration standards were all within acceptance criteria, with the average recovery being 100.2% for TIC and 99.7% for TOC.

Calibration Blanks: The three calibration blanks run at the beginning and end of the analysis run were acceptable, averaging 13 μgC TIC and 40 μgC TOC.

Duplicates: No actual sample duplicate was provided to the laboratory for analysis. However replicates of the sample were analyzed. The relative percent differences (RPD) between replicates

was not calculated since the TOC concentration in the sample and replicate are less than five times the method detection limit.

Matrix Spike: The accuracy of the carbon measurements can be estimated by the recovery results from the matrix spike. The matrix spike for this sample recovered at 96.5% for TOC, well within the 75% to 125% recovery acceptance criteria.

General Comments:

- The reported "Final Results" have been corrected for all dilution performed on the sample during processing or analysis.
- Routine precision and bias are typically ±15% or better for non-complex samples that are free of interferences.
- The estimated quantitation limit (EQL) is defined as 5 times the MDL. Results less than 5 times the MDL have higher uncertainties, and RPDs are not calculated for any results less than 5 times the MDL.
- Some results may be reported as less than ("<") values. These less than values represent the sample MDL (method detection limit), which is the system MDL adjusted for the volume of sample used for the analysis. The system MDL is based on the attached pooled historical blank data. The evaluation and calculation of the system MDL is included in the data package.

Report Prepared by: _____ **Date** 1-11-00

Review/Approval by: _____ **Date** 1-14-00

Archive Information:

Files: ASR 5571 Kurath.doc	ASR 5478 5536 5571 Liq+Solids.xls

29953 4 cob. 9
T2.9.3.3

Battelle PNNL/RPG/Inorganic Analysis --- IC Report

Client: D. Kurath
ACL Numbers: 99-2289, 00-0348
Analyst: MJ Steele

Charge Code/Project: W48409 / 29953
ASR Number: 5463, 5571
Analysis Date: November 01-03, 1999

Procedure: PNL-ALO-212, "Determination of Inorganic Anions by Ion Chromatography"
M&TE: IC system (WD25214); Balance (360-06-01-031) --- See Chemical Measurement Center 98620 RIDS IC File for Calibration, Standards Preparations, and Maintenance Records.

Final Results:

AW-101 eluant composite ASR 5463

AW-101 TC ~~effluent~~ ASR 5571 eluate composite sample

Lab ID	Sample ID	F µg/ml	Cl µg/ml	NO_2 µg/ml	Br µg/ml	NO_3 µg/ml	PO_4 µg/ml	SO_4 µg/ml	C_2O_4 µg/ml
99-2289	CS-IX	< 500	< 500	< 1000	< 500	33,000	< 1000	< 1000	< 1000
99-2289 Rep	CS-IX Rep	< 500	< 500	< 1000	< 500	33,000	< 1000	< 1000	< 1000
	RPD	n/a	n/a	n/a	n/a	0%	n/a	n/a	n/a
	99-2289 MS Rec	100%	98%	103%	103%	97%	103%	105%	105%
	Blank Spike Rec	102%	97%	103%	106%	106%	105%	106%	105%
00-0348	A1-Tc-~~LC~~ ECl	< 500	< 500	< 1000	< 500	30,400	< 1000	< 1000	< 1000
00-0348 Rep	A1-Tc-~~LC~~ Rep	< 500	< 500	< 1000	< 500	30,800	< 1000	< 1000	< 1000
	(03) ECl RPD	n/a	n/a	n/a	n/a	1%	n/a	n/a	n/a
	00-0348 MS Rec	107%	103%	108%	114%	113%	112%	113%	113%

RPD = Relative Percent Difference (between sample and duplicate/replicate)
MS Rec = Matrix Spike Standard % recovery
Blank Spike Rec = Blanks Spike Standard % recovery

The samples were analyzed by ion chromatography (IC) for inorganic anions as specified in the governing ASRs. The liquid samples were diluted at the IC workstation up to 2,000-fold to ensure that all anions were within the calibration range.

Q.C. Comments:

Duplicates: The relative percent difference (RPD between duplicates/replicates could only be determined for nitrate, since all other anions were below the detection limit at the dilutions measured. The nitrate RPDs are well within the acceptance criteria of 20%.

Matrix Spike: Spikes were prepared and measured for both samples. The matrix spike recoveries for all anions are well within the 75% to 125% recovery acceptance criteria.

Blank Spike: The blank spike is used as the laboratory control sample and recovered within the acceptance criteria of 80% to 120%.

System Blank/Processing Blanks: Approximately ten system blanks were process during the analysis of the samples. With the exception of only single nitrate value, no anions were detected

above reportable concentrations in the system blanks. Since the nitrate results are very high, this single QC failure does not affect the reported nitrate results.

Quality Control Calibration Verification Check Standards: Approximately ten mid-range verification standards were analyzed throughout the analysis runs. Except for a single phosphate value, the reported results for all analytes of interest were recovered within the acceptance criteria of ±10% for the verification standard. The one phosphate result recovered at +11% above the true value. This single phosphate failure has no impact on the reported results.

General Comments:

- The reported "Final Results" have been corrected for all dilution performed on the sample during processing or analysis.
- The low calibration standards are defined as the estimated quantitation limit (EQL) for the reported results and assume non-complex aqueous matrices. Actual detection limits or quantitation limits for specific sample matrices may be determined, if requested.
- Routine precision and bias are typically ±15% or better for non-complex aqueous samples that are free of interference and have similar concentrations as the measured anions.

Analyst: MJ Steele

Approval: MW Chen **Date** 11-12-99

Archive Information:

Files: ASR 5463 5571 Kurath.doc	ASR 5463 5533 -36 -68 -71.xls

Battelle PNNL/325 Bldg/RPG/Inorganic Analysis ...
ICPAES Data Report

Project: 29953
Client: D. Kurath

ACL Number(s): 00-0295 through 00-0348

Client ID: "C1-Cs-ICP" through "A1-Tc-EC1"

ASR Number: 5571

Total Samples: 16

Procedure: PNL-ALO-211, "Determination of Elements by Inductively Coupled Argon Plasma Atomic Emission Spectrometry" (ICP-AES).

Analyst: D.R. Sanders

Analysis Date (Filename): 12-02-99 (A0563)

See Chemical Measurement Center 98620: ICP-325-405-1 File for Calibration and Maintenance Records.

M&TE Number: ICPAES instrument -- WB73520
Mettler AT400 Balance -- Ser.No. 360-06-01-029

Jerry Wagner 12-15-99
Reviewed by

M W Thie 12-16-99
Concur

Sixteen radioactive liquid samples, C1-Cs-ICP through A1-Tc-EC1 (ACL# 00-0295 through 00-0348), were analyzed by ICPAES after preparation by the Sample Receiving and Preparation Lab (SRPL). All samples except ACL# 00-0295, 00-0331 and 00-0348 were prepared by SRPL using PNL-ALO-128 acid digestion procedure. Approximately 2 to 4 ml of sample (weighed) was processed and diluted to a final volume of approximately 10ml. Density of the final solution will be determined using a 1ml aliquot taken from each processed sample, weighed and the density estimated by dividing the aliquot weight by the weight of water using the same pipette. The final volume of each processed sample may then be calculated using the final weight of processed sample divided by the estimated density. Results of the density estimates for the samples will be sent as a separate report. Several samples required analytical dilution of 5-fold or more because of high sodium concentration. Concentration for samples ACL# 00-0306 through 00-0318 are reported in **ug/ml** and corrected for analytical dilution and sample processing (diluted by mass: weight of final solution divided by weight of sample aliquot).

Sample ACL# 00-0295 was not processed, only diluted about 10-fold before analysis using 2% v/v nitric acid. Also samples ACL# 00-0331 and 00-0348 were not processed and analyzed as received except for analytical dilution analysis using 2% v/v nitric acid as needed. Concentration for samples ACL# 00-0295, 00-0331, 00-0348 are reported in **ug/g** and corrected for dilution (final solution volume divided by weight of sample aliquot).

Volumes and weights have been recorded on bench sheets and included with this report. Specific analytes of interest requested in table 6-1 attached to ASR-5571 include: Al, Ba, Ca, Cd, Co, Cr, Cu, Fe, K, La, Mg, Mn, Mo, Na, Ni, Pb, Si, Sn, Ti, U, and Zn.

Most of samples contained high concentrations of sodium. A few samples had moderately high concentrations of aluminum. All other analytes measured were much lower in concentration. Please note that sample C1-Cs-PR3-A (ACL# 00-0315) appears to be quite different than those in the series of six samples C1-Cs-PR1-A through C1-Cs-PR6-A (ACL# 00-0313 through 00-0318). Several analytes such as aluminum, cadmium, sodium, phosphorus, lead, and strontium are higher in concentration than those in the previous or later sample series.

Quality control check-standard results met tolerance requirements for all analytes of interest except as noted below. Following is a list of quality control measurement results relative to ICPAES analysis tolerance requirements under MCS-033.

Five fold serial dilution:

(Aqueous samples) All results for analytes of interest were within tolerance limit of ≤ 10% after correcting for dilution.

Duplicate RPD (Relative Percent Difference):

(Aqueous samples) All analytes of interest were recovered within tolerance limit of ≤ 20% relative percent difference (RPD) except for barium and zinc. The original sample aliquot did not have any significant amount (detectable but below EQL) of either barium or zinc. However the replicate processed sample had about twice as much zinc and thirty times more barium than the original sample. Also noted was the concentration of barium and zinc in the process blank. Only sample "C1-Cs-PR4-A" (ACL# 00-0316) had as much barium as the process blank. It appears that the preparation blank had become contaminated during sample processing.

Post-Spiked Samples (Group A):

(Aqueous samples) All analytes of interest were recovered within tolerance of 75% to 125%.

Post-Spiked Samples (Group B):

(Aqueous samples) All analytes of interest were recovered within tolerance of 75% to 125%.

Blank Spike:

(Aqueous samples) None prepared.

Matrix Spiked Sample:

(Aqueous samples) None prepared.

Quality Control Check Standards (aqueous samples):

Concentration of all analytes of interest was within tolerance limit of ± 10% accuracy in standards: QC_MCVA, QC_MCVB, and QC_SSTMCV. Calibration Blank (ICP98.0) concentration was acceptable, less than two times IDL.

High Calibration Standard Check (aqueous samples):

Verification of the high-end calibration concentration for all analytes of interest is within tolerance of ± 5% accuracy except nickel. Nickel was slightly low (6.4%) at the end of the run in QC_SST however it was within 5% (low) when measured at the start of the run.

Process Blank:
(Aqueous samples) All analytes of interest were within tolerance limit of ≤ EQL or < 5% of sample concentration except barium. As noted above for the %RPD quality control check, barium was above EQL (0.5 ug/ml) and appeared to be about the same concentration as that measured in the replicate sample (ACL# 00-0313REP) and (ACL# 00-316). It would appear that the process blank was contaminated during sample processing.

Laboratory Control Standard (LCS):
(Aqueous samples) No LCS was prepared for PNL-ALO-128 acid digested samples.

Analytes other than those requested by the client are for information only. Please note bracketed values listed in the data report are within ten times instrument detection limit and have a potential uncertainty much greater than 15%.

Comments:

1) "Final Results" have been corrected for all laboratory dilution performed on the sample during processing and analysis unless specifically noted.

2) Detection limits (DL) shown are for acidified water. Detection limits for other matrices may be determined if requested.

3) Routine precision and bias is typically ± 15% or better for samples in dilute, acidified water (e.g. 2% v/v HNO_3 or less) at analyte concentrations greater than ten times detection limit up to the upper calibration level. This also presumes that the total dissolved solids concentration in the sample is less than 5000 µg/mL (0.5 per cent by weight).

4) Absolute precision, bias and detection limits may be determined on each sample if required by the client.

5) The maximum number of significant figures for all ICP measurements is 2.

Battelle PNNL/RPG/Inorganic Analysis ... ICPAES Data Report

	Multiplier=	40.5	1.0	1.0		
	ALO#=	00-0295 @5	00-0331	00-0348		
	Client ID=	C1-Cs-ICP	Regeneration soln	A1-Tc-EC1		
Det. Limit	Run Date=	12/2/99	12/2/99	12/2/99		
(ug/mL)	(Analyte)	ug/g	ug/g	ug/g		
0.025	Ag	--	--	--	--	--
0.060	Al	1,960	0.870	7.46	--	--
0.250	As	--	--	--	--	--
0.050	B	28.8	3.74	8.41	--	--
0.010	Ba	--	--	[0.030]	--	--
0.010	Be	--	--	--	--	--
0.100	Bi	--	--	--	--	--
0.250	Ca	137	--	--	--	--
0.015	Cd	23.1	--	--	--	--
0.200	Ce	--	--	--	--	--
0.050	Co	--	--	--	--	--
0.020	Cr	36.6	0.252	1.51	--	--
0.025	Cu	15.5	0.282	--	--	--
0.050	Dy	--	--	--	--	--
0.100	Eu	--	--	--	--	--
0.025	Fe	[8.3]	0.488	10.7	--	--
2.000	K	[630]	--	23.8	--	--
0.050	La	--	--	--	--	--
0.030	Li	--	--	--	--	--
0.100	Mg	--	--	[0.13]	--	--
0.050	Mn	--	--	[0.15]	--	--
0.050	Mo	[12]	--	--	--	--
0.150	Na	90,100	1,790	108	--	--
0.100	Nd	--	--	--	--	--
0.030	Ni	188	[0.11]	1.34	--	--
0.100	P	249	--	[0.24]	--	--
0.100	Pb	53.0	--	--	--	--
0.750	Pd	--	--	--	--	--
0.300	Rh	--	--	--	--	--
1.100	Ru	--	--	--	--	--
0.500	Sb	--	--	--	--	--
0.250	Se	--	--	--	--	--
0.500	Si	[59]	18.8	16.7	--	--
1.500	Sn	--	--	--	--	--
0.015	Sr	107	--	--	--	--
1.500	Te	--	--	--	--	--
1.000	Th	--	--	--	--	--
0.025	Ti	--	--	--	--	--
0.500	Tl	--	--	--	--	--
2.000	U	--	--	--	--	--
0.050	V	--	--	--	--	--
2.000	W	--	--	--	--	--
0.050	Y	--	--	--	--	--
0.050	Zn	[5.4]	0.532	[0.12]	--	--
0.050	Zr	--	--	--	--	--

Note: 1) Overall error greater than 10-times detection limit is estimated to be within +/- 15%.
2) Values in brackets [] are within 10-times detection limit with errors likely to exceed 15%.
3) "--" indicate measurement is below detection. Sample detection limit may be found by multiplying "det. limit" (far left column) by "multiplier" (top of each column).

CLIENT Kenneth

ASR 5571 DATA

ACID DIGEST
METHOD 128

ANALYST MJ Steele DATE 11/16/9

REVIEWER _____ DATE _____

PRELIMINARY DATA
FINAL REPORT TO
FOLLOW

Note: dilutions should be done by mass.

Sample ID		vial (g)	vial+ sample(g)	sample (g)	post digest(g) new vial	post digest(g) sample(g)	[illegible]	final vol.(ml)
C1-Cs-ICP	00-0295 ✓	8.2179	8.8352	0.6173	NA			5
C1-Cs-FD1-B	00-0306 ✓	8.1289	10.6006	2.4717	6.8823	17.0703	10.188	10
C1-Cs-FD2-B	00-0307 ✓	8.0605	10.5321	2.4716	6.9176	16.9577	10.0401	10
C1-Cs-FD3-B	00-0308 ✓	8.3068	10.6631	2.3563	6.8334	16.5048	9.6714	10
C1-Cs-FD4-B	00-0309 ✓	8.0952	10.3006	2.2054	6.9074	16.4375	9.5301	10
C1-Cs-FD5-B	00-0310 ✓	8.2097	10.3261	2.1164	6.9218	16.8993	9.9775	10
C1-Cs-FD6-B	00-0311 ✓	8.1188	10.1608	2.042	6.9653	17.128	10.1627	10
C1-Cs-FD7-B	00-0312 ✓	7.939	9.9628	2.0238	6.9433	17.254	10.3107	10
C1-Cs-PR1-A	00-0313 ✓	8.0484	11.067	3.0186	6.8496	16.8079	9.9583	10
C1-Cs-PR2-A	00-0314 * ✓	2.1417 ~~8.417~~	11.1532	3.0115 ~~2.7302~~	6.8531	16.9523	10.0992	10
C1-Cs-PR3-A	00-0315 * ✓	8.0273	12.087	4.0597	6.9087	17.1594	10.2507	10
C1-Cs-PR4-A	00-0316 * ✓	8.1647	10.1648	2.0001	6.9281	16.9736	10.0455	10
C1-Cs-PR5-A	00-0317 * ✓	8.0868	11.0747	2.9879	6.96	16.8984	9.9384	10
C1-Cs-PR6-A	00-0318 * ✓	8.2479	11.2531	3.0052	6.9718	16.9131	9.9413	10
regeneration soln	00-0331 ✓	8.0918	13.0325	4.9407	NA	NA		5
A1-Tc-EC1	00-0348 ✓	8.0802	13.0584	4.9782	NA	NA		5
C1-Cs-PR1-A	00-0313 REP ✓	8.1162	11.1307	3.0145	6.8343	16.865	10.0307	10
ASR 5571	PROCESS BLANK ✓				6.9092	17.2599	10.3507	10

*SAMPLE ABOUT 0.5 ML DIGEST = ABOUT 3 HOURS

PRELIMINARY DATA
FINAL REPORT TO
FOLLOW

L:/IAG/PREP/ASR5571.xls

File: 00-0295

Battelle Pacific Northwest Laboratory
Radiochemical Processing Group-325 Building

1/6/00

Client : Kurath

Cognizant Scientist: L R Greenwood Date : 1/6/00

Concur : T Trang-le Date : 1/6/2000

Procedure: PNL-ALO-476

Measured Activities (uCi/g) with 1-σ error

ALO ID Client ID	Sr-90 Error +/-
00-00348 A1-Tc-EC1	1.47E-3 4%
Matrix Spike	103%
Blank Spike	105%
Blank	3.31E-7 31%

File: 00-0295

Battelle Pacific Northwest Laboratory
Radiochemical Processing Group-325 Building

1/14/00

Client : Kurath

Cognizant Scientist: L R Greenwood Date : 1/14/00

Concur : T Trang-le Date : 1/14/2000

Measured Activities (uCi/g) with 1-σ error

ALO ID Client ID	Alpha Error +/-
00-00348 A1-Tc-EC1	<2.E-3
Blank Spike	114%
Blank	<2.E-6

File: 00-0295.xls

Battelle Pacific Northwest Laboratory
Radiochemical Processing Group-325 Building
Radioanalytical Applications Team

12/6/1999

Client : Kurath

Cognizant Scientist: L R Greenwood Date : 12/6/99

Concur : Richard T. R Date : 12/7/99

Procedure: PNL-ALO-450

AW101 Samples
! (LAST PAGE)

Measured Activities (uCi/g) with 1-sigma error

ALO ID Client ID	Co-60 Error %	Rurh-106 Error %	Sb-125 Error %	SnSb-126 Error %	Cs-134 Error %	Cs-137 Error %	Eu-154 Error %	Eu-155 Error %	Am-241 Error %	Y-88 Error %	Tc-95 Error %	Tc-95M Error %	Co-57 Error %
00-00295 C1-Cs-ICP	4.86E-2 3%	<2.E-1	<2.E-1	<5.E-2	<4.E-3	1.26E+2 2%	3.24E-2 6%	<8.E-2	<7.E-2				
00-00296 C1-Cs-0A	7.10E-4 4%	<3.E-3	<2.E-3	<6.E-4	<6.E-5	1.60E+0 2%	3.39E-4 14%	<2.E-3	<2.E-3				
00-00297 C1-Cs-L1A	4.38E-2 2%	<2.E-2	<7.E-3	<3.E-3	2.93E-4 35%	2.93E+1 2%	2.80E-2 2%	1.67E-2 10%	9.77E-3 17%				
00-00298 C1-Cs-L3A	4.43E-2 2%	<9.E-2	<6.E-2	<3.E-2	<2.E-3	5.29E+1 2%	2.90E-2 5%	<4.E-2	<4.E-2				
00-00299 C1-Cs-L6A	4.69E-2 2%	<5.E-2	<3.E-2	<2.E-2	<1.E-3	8.81E+1 2%	2.85E-2 3%	<2.E-2	<2.E-2				
00-00300 C1-Cs-L9B	5.16E-4 6%	<5.E-3	<3.E-3	<1.E-3	<7.E-5	1.13E+0 2%	4.01E-4 12%	<2.E-3	<2.E-3				
00-00301 C1-Cs-L12B	5.40E-4 6%	<5.E-3	<3.E-3	<1.E-3	<7.E-5	1.16E+0 2%	4.94E-4 12%	<3.E-3	<2.E-3				
00-00302 C1-Cs-P1A	3.52E-2 2%	<8.E-4	2.98E-4 28%	3.20E-4 6%	<2.E-4	1.08E-3 5%	2.52E-2 2%	1.79E-2 3%	9.03E-4 5%				
00-00303 C1-Cs-P2A	4.00E-2 2%	<2.E-3	5.57E-4 25%	3.58E-4 8%	<2.E-4	4.70E-3 3%	2.83E-2 2%	1.96E-2 3%	1.03E-2 7%				

Measured Activities (uCi/g) with 1-sigma error

ALO ID Client ID	Co-60 Error %	Rurh-106 Error %	Sb-125 Error %	SnSb-126 Error %	Cs-134 Error %	Cs-137 Error %	Eu-154 Error %	Eu-155 Error %	Am-241 Error %	Y-88 Error %	Tc-95 Error %	Tc-95M Error %	Co-57 Error %
00-00345 A1R-Cs-P2	3.08E-4 2%	2.78E-4 12%	9.85E-5 17%	2.18E-4 2%	4.91E-5 7%	1.97E-2 2%	2.87E-5 15%	<6.E-5	<7.E-5				
00-00346 A1R-Cs-P7	2.77E-4 2%	2.30E-4 14%	6.97E-5 24%	1.77E-4 3%	7.31E-6 37%	2.91E-2 2%	1.78E-5 21%	<5.E-5	<7.E-5				
00-00347 A1-Cs-E2-CO	<1.E-5	<2.E-3	<7.E-4	<2.E-4	6.76E-5 22%	4.54E-1 2%	<5.E-5	<5.E-4	<6.E-4				
00-00348* A1-Tc-EC1	<2.E-6	<2.E-4	<6.E-5	<2.E-5	<2.E-5	6.61E-5 10%	<5.E-6	<7.E-5	<6.E-5	9.93E-6 7%	4.61E-3 2%	9.76E-2 2%	
00-00349** A1-Tc-LC	2.88E-4 2%	2.83E-4 8%	8.48E-5 20%	2.04E-4 4%	9.00E-6 16%	5.89E-2 2%	2.33E-5 8%	<4.E-5	<6.E-5	2.14E-5 4%	8.52E-5 4%	1.80E-3 2%	6.84E-5 38%
00-00365 C1-Cs-OAR	7.29E-3 3%	<3.E-2	<2.E-2	<6.E-3	<6.E-4	1.81E+1 2%	4.65E-3 8%	<1.E-2	<9.E-3				

*Sample activity of Tc-95m as of 11/17/99 at 15:00
**Sample activity of Tc-95m as of 11/18/99 at 14:30

Analytical Data and Calculations

I. Components of Feed Displacement and Rinse

See (III) below for details and spreadsheet ICP.xls for items not found here.

Sample	BV	Total BV	Na (ug/mL)	K (ug/mL)	Cr (ug/mL)	Al (ug/mL)	P (ug/mL)	OH (M)	CO3 (M)	HCO3 (M)
PW1	1.39	263.43	82282.20	13213.20	35.64	9819.81	196.20	2.04	0.687	0.06
PW3	3.94	265.98	94094.00	14514.50	38.94	10810.80	215.22	2.04	0.692	0.1
PW5	6.25	268.29	56956.90	8458.45	20.32	5605.60	122.12	1.09	0.336	0.04
PW7	8.50	270.54	11811.80	1801.80	4.05	1061.06	28.53	0.215	0.066	< MDL
PR1	1.10	271.63	6410.00	998.00	1.73	446.00	12.60	0.145	0.032	0.01
PR3	3.05	273.59	3350.00	417.00	[0.56]	138.00	[4.60]	0.11	0.018	0.01
PR5	5.20	275.74	2430.00	214.00	[0.27]	63.70	[2.20]	0.09	0.003	0.01
Regen	na	na	3225.60	< MDL	[0.34]	3.32	< MDL	0.115	0.01	0.01

II. Anions in Feed

Sample A1-Tc-0 Tc-99 = 3.75 ug/mL= 3.79E-05 M

Anion	ug/mL	moles/L	Normality	Mole ratio to Tc-99
F	1020	0.053688723	0.053688723	
Cl	2670	0.075310975	0.075310975	
NO2	46500	1.010748715	1.010748715	2.67E+04
Br	200	0.002503004	0.002503004	
NO3	92800	1.496655909	1.496655909	3.95E+04
PO4	400	0.004211796	0.012635388	1.11E+02
SO4	690	0.00718319	0.01436638	1.90E+02
C2O4	400	0.004544442	0.009088885	1.20E+02
CrO4		0.000903931	0.001807862	2.39E+01
AlO2		0.411	4.11E-01	
OH		2.17	2.17E+00	
CO3		0.13	0.26	
Tot Anion Normality			5.52E+00	

III. Selected ICP-AES Results and Conversion from ug/g to ug/mL and Molarity

Element	Atomic Mass g/mole	A1-Tc-PW1 8/3/99 ug/g	A1-Tc-PW1 ug/mL	A1-Tc-PW3 8/3/99 ug/g	A1-Tc-PW3 ug/mL	A1-Tc-PW5 8/3/99 ug/g	A1-Tc-PW5 ug/mL	A1-Tc-PW7 8/3/99 ug/g	A1-Tc-PW7 ug/mL	A1-Tc-PR1 8/3/99 ug/g
Ag	107.868	--		--		--		--		--
Al	26.980	9,810	9819.81	10,800	10810.80	5,600	5605.60	1,060	1061.06	446
As	74.920	[7.3]	[7.31]	[8.2]	[8.21]	[4.1]	[4.10]	[0.71]	[0.71]	--
B	10.810	31.0	31.03	35.0	35.04	27.3	27.33	13.5	13.51	10.4
Ba	137.330	--		--		--		[0.054]	[0.05]	[0.052]
Be	9.012	[0.81]	[0.81]	[0.89]	[0.89]	[0.43]	[0.43]	[0.082]	[0.08]	--
Bi	208.980	--		--		--		--		--
Ca	40.080	[6.5]	[6.51]	[7.3]	[7.31]	[4.7]	[4.70]	[1.4]	[1.40]	[1.2]
Cd	112.410	[1.4]	[1.40]	[1.5]	[1.50]	[0.77]	[0.77]	[0.15]	[0.15]	--
Ce	140.120	--		--		--		--		--
Co	58.930	--		--		--		--		--
Cr	51.996	35.6	35.64	38.9	38.94	20.3	20.32	4.05	4.05	1.73
Cu	63.546	[1.9]	[1.90]	[2.1]	[2.10]	[1.2]	[1.20]	[0.72]	[0.72]	[0.36]
Dy	162.500	--		--		--		--		--
Eu	151.960	--		--		--		--		--
Fe	55.847	5.18	5.19	5.41	5.42	[2.6]	[2.60]	[0.65]	[0.65]	[0.54]
K	39.098	13,200	13213.20	14,500	14514.50	8,450	8458.45	1,800	1801.80	998
La	138.906	--		--		--		--		--
Li	6.941	[0.18]	[0.18]	[0.20]	[0.20]	--		--		--
Mg	24.305	--		--		--		--		--
Mn	54.938	--		--		--		--		--
Mo	95.940	21.0	21.02	23.1	23.12	11.8	11.81	2.36	2.36	[0.88]
Na	22.990	82,200	82282.20	94,000	94094.00	56,900	56956.90	11,800	11811.80	6,410
Nd	144.240	--		--		--		--		--
Ni	58.700	[2.5]	[2.50]	[2.7]	[2.70]	[1.4]	[1.40]	[0.33]	[0.33]	--
P	30.970	196	196.20	215	215.22	122	122.12	28.5	28.53	12.6
Pb	207.200	19.0	19.02	21.3	21.32	[9.1]	[9.11]	[1.0]	[1.00]	[0.30]
Pd	106.400	--		--		--		--		--
Rh	102.906	--		--		--		--		--
Ru	101.070	[2.5]	[2.50]	[2.7]	[2.70]	--		--		--
Sb	121.750	--		--		--		--		--
Se	78.960	[3.6]	[3.60]	[3.9]	[3.90]	[2.1]	[2.10]	--		--
Si	28.086	91.6	91.69	108	108.11	73.7	73.77	36.6	36.64	33.2
Sn	118.690	[44]	[44.04]	[49]	[49.05]	[24]	[24.02]	--		--
Sr	87.620	--		--		--		--		--
Te	127.600	--		--		--		--		--
Th	232.038	--		--		--		--		--
Ti	47.900	--		--		--		--		--
Tl	204.370	--		--		--		--		--
U	238.029	--		--		--		--		--
V	50.942	--		--		--		--		--
W	183.850	[39]	[39.04]	[42]	[42.04]	[24]	[24.02]	[4.7]	[4.70]	--
Y	88.906	--		--		--		--		--
Zn	65.380	5.92	5.93	6.57	6.58	[3.6]	[3.60]	[0.94]	[0.94]	[0.59]
Zr	91.220	[0.52]	[0.52]	[0.57]	[0.57]	[1.0]	[1.00]	[0.15]	[0.15]	--

A1-Tc-PR1 ug/mL	A1-Tc-PR3 8/3/99 ug/g	A1-Tc-PR3 ug/mL	A1-Tc-PR5 8/3/99 ug/g	A1-Tc-PR5 ug/mL	regeneration 8/3/99 ug/g	regeneration ug/mL	M
	--		--		--		
446.00	138	138.00	63.7	63.70	3.29	3.32	0.0001229
	--		--		--		
10.40	12.3	12.30	10.4	10.40	13.3	13.41	0.0012402
[0.05]	[0.086]	[0.09]	[0.068]	[0.07]	[0.18]	[0.18]	
	--		--		--		
	--		--		--		
[1.20]	[1.5]	[1.50]	[1.4]	[1.40]	[3.1]	[3.12]	
	--		--		--		
	--		--		--		
	--		--		--		
1.73	[0.56]	[0.56]	[0.27]	[0.27]	[0.34]	[0.34]	
[0.36]	--		--		--		
	--		--		--		
	--		--		--		
[0.54]	[0.49]	[0.49]	[0.33]	[0.33]	[1.1]	[1.11]	
998.00	417	417.00	214	214.00	--		
	--		--		--		
	--		--		--		
	--		--		--		
	--		--		[0.060]	[0.06]	
[0.88]	[0.17]	[0.17]	--		--		
6410.00	3,350	3350.00	2,430	2430.00	3,200	3225.60	0.1403045
	--		--		--		
	--		--		--		
12.60	[4.6]	[4.60]	[2.2]	[2.20]	--		
[0.30]	--		--		--		
	--		[2.2]	[2.20]	--		
	--		--		--		
	--		--		--		
	--		--		--		
	--		--		--		
33.20	41.9	41.90	37.5	37.50	68.6	69.15	0.002462
	--		--		--		
	--		--		--		
	--		--		--		
	--		--		--		
	--		--		--		
	--		--		--		
	--		--		--		
	--		--		--		
	--		--		--		
	--		--		--		
[0.59]	[0.56]	[0.56]	[0.44]	[0.44]	[0.71]	[0.72]	
	--		--		--		

Distribution

No. of Copies		
OFFSITE		
1	R. Bruening IBC Technologies 856 E. Utah Valley Drive American Fork, UT 84003	
1	P. McGinnis Oak Ridge National Laboratory PO Box 2008 Oak Ridge, TN 37831-6273	
1	B. Moyer Oak Ridge National Laboratory PO Box 2008 Oak Ridge, TN 37831	
1	N. C. Schroeder Los Alamos National Laboratory PO Box 1663 MSIN J514 CST11 Los Alamos, NM 87545	

No. of Copies		
ONSITE		
5	British Nuclear Fuels, Limited	
	M. E. Johnson (4)	BN-FL
	A. Thompson	BN-FL
13	Pacific Northwest National Laboratory	
	D. L. Blanchard Jr. (2)	P7-25
	J. R. Bontha	K6-24
	D. E. Kurath (2)	P7-28
	E. V. Morrey	P7-28
	Information Release Office (7)	K1-06