# REDI-PRO…

## Onboard health monitoring and prognostics for gas turbine engines

***REDI-PRO will:***

- ***Reduce maintenance staff hours***
- ***Improve diagnostics***
- ***Enhance readiness***
- ***Provide for optimized maintenance scheduling***

The U.S. Army's current maintenance practices for the M1 Abrams main battle tank (MBT) mainly employ manual diagnostic procedures. Rather than using automated diagnostic and prognostic paradigms, the current practice verifies only whether the operational states are within or out of tolerance. A need exists to automate the monitoring of the MBT in real time to assess the current vehicle health and to predict near-term vehicle health and readiness.

***REDI-PRO will help achieve condition-based maintenance for Army's Main Battle Tank***

## Real-time Predictive Analysis

Under an Interagency Agreement with the U.S. Army Logistics Integration Agency, Pacific Northwest National Laboratory is developing a prototype diagnostic/prognostic system for the MBT's AGT1500 turbine engine that uses artificial neural networks to diagnose and predict faults. The operational prototype system is called REDI-PRO, for Realtime Engine Diagnostics-Prognostics. The REDI-PRO system promises to save maintenance staff hours, improve diagnostic performance, enhance readiness, and provide for optimized maintenance scheduling based on need.

When fully implemented, REDI-PRO will assess engine health through diagnostics/prognostics based on onboard sensors. Artificial neural network systems conduct sensor fusion and identify deviations from normal operation. Ultimately, fielding this technology in the MBT fleet will enable health and readiness information to be conveyed via telemetry to command/control and maintenance support so that battle readiness and maintenance needs may be assessed immediately.

## System Design/Fabrication

The REDI-PRO system is being designed and fabricated at the Pacific Northwest National Laboratory. Sensor data are acquired through cables connected to electronic components onboard the tank as well as through a specially designed wiring harness to accommodate 16 auxiliary sensors that are part of the REDI-PRO operational prototype. The sensor signals are conditioned using two printed circuit boards, multiplexed to a data acquisition card, and then sent on to a Pentium processor for analysis. The REDI-PRO operational prototype electronics are packaged in a data acquisition box. Plans are underway to integrate the REDI-PRO functionality into an upgrade of onboard electronic components for the M1A1 tank. The most cost-effective of the 16 auxiliary sensors will be included in the upgrade.

***Located in the driver's compartment, the* REDI-PRO *operational prototype is smaller than a briefcase and does not interfere with tank operations.***

## Model-Based Diagnostics

REDI-PRO is being developed using model-based diagnostics and artificial neural networks. This technology allows the diagnostic/prognostic system to model normal engine performance, learn to recognize deviations from normal behavior, and classify these deviations as conditions requiring maintenance attention.

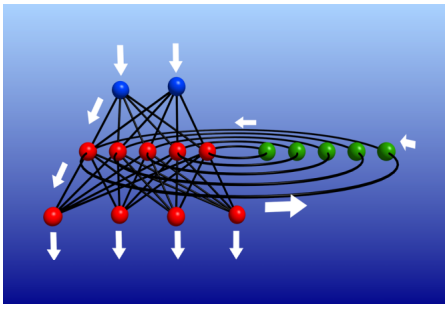

***Artificial neural networks model engine performance.***

## Field Data Collection

Earlier versions of the REDI-PRO prototype were used to collect data in the field and demonstrate the REDI-PRO concept. More recently, REDI-PRO was installed on six tanks in the field, including the Army National Guard site at Yakima Training Center and the US Army Yuma Proving Ground.

The artificial neural networks comprising the REDI-PRO diagnostic/prognostic system were developed and trained using data collected from the field as well as data obtained from steady-state simulations and thermodynamic models of the AGT1500 engine.

## Visualization of Results

Results of the analysis are presented in various forms. For the tank crew, the REDI-PRO software may display only the most critical information, such as the engine's health check power rating or any critical diagnostic alerts yielded by the real-time onboard analysis.

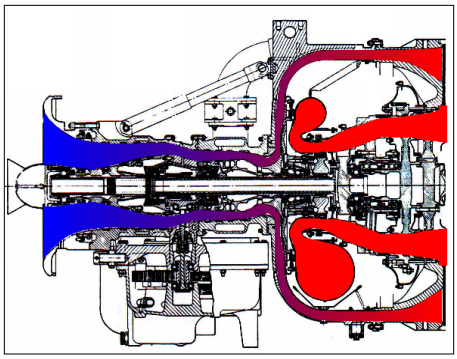

**REDI-PRO** ***provides graphical visualizations of engine temperatures and pressures.***

For maintenance personnel, REDI-PRO displays include graphs of sensor data streams, alphanumeric readouts, an engine duty factor summary, graphical display of temperatures and pressures, and more detailed diagnostic output of the artificial neural network systems.

## Revolution in Military Logistics

This research and development signals the beginning of the realization of an advanced logistics vision: the fielding of systems employing onboard diagnostics/prognostics capabilities that provide critical information needed to reduce sustainment costs and enhance force readiness.

---

*As a U.S. Department of Energy multi-program national laboratory, Pacific Northwest National Laboratory develops and deploys technology for national missions in energy, the environment, defense, and human health.*

**For more information, contact**

Dr. Frank L. Greitzer
Pacific Northwest
National Laboratory
P.O. Box 999, MSIN: K8-23
Richland, WA 99352
Telephone: (509) 372-4251
E-mail: frank.greitzer@pnl.gov

11/99