Development of a Microchannel *In Situ* Propellant Production System

2005 Micro Nano Breakthrough Conference

July 28, 2005

Kriston Brooks, Scot Rassat, John Hu, Susie Stenkamp, Steve Schlahta (Battelle), Tom Simon, Kris Romig, Candice Howard (JSC), Uday Hegde, Dan Dietrich (GRC), Robert Kee (CSM), Greg Rorrer (OSU)

Battelle

Presentation Contents

- Contents:
  - Purpose of a Microchannel In Situ Propellant Production System
    - Need for In Situ Propellant Production
    - Advantages of microchannel architectures
  - System Design Requirements to meet TRL 5
    - Full-scale Requirements versus Demonstration Requirements
  - Preliminary System Design
  - Subsystem descriptions
  - Other technology target applications
  - Current and future plans

In Situ Propellant Production

Bring to Mars:

- Propellant for One-Way Trip
- Chemical Plant
- 52 kg Liquid Hydrogen

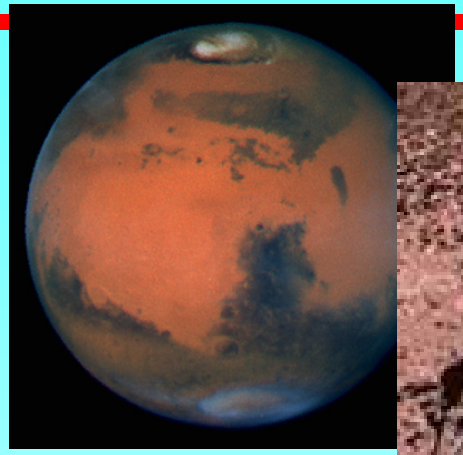

While on Mars:

- Acquire CO_2 from Atmosphere
- Generate 1000 kg CH_4 and O_2 propellant for return trip

Return to Earth:

- 160 kg MAV
- Collect 3.7 kg of samples

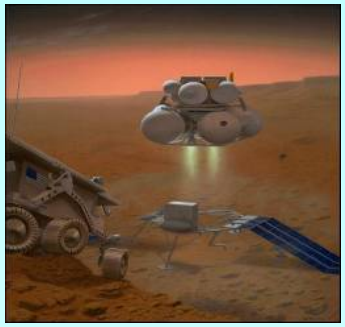

Need for Mars *In Situ* Propellant Production

- Reduce Cost
  - Producing propellants on Mars can reduce the initial mass launched by 20% to 45%, as compared to carrying all of the propellant for a round-trip mission to the Mars surface from Earth. (AIAA 2001-0939)
- Reduce Risk
  - Propellant for return trip and oxygen for life support can be produced by earlier mission before manned mission leaves earth. Propellant production on Mars surface may eliminate need for in-orbit rendezvous.
- Enhance, Enable and Extend Mission
  - Provide fuel for hoppers and rovers for increased mobility on surface
  - Increase return trip payload
  - Provide for longer mission stays

Advantages of Microchannel Architecture

Simplified Scale-Up
(channels in parallel and/or in series)

Reduced Volume and Mass
(combine reactors/heat exchange)

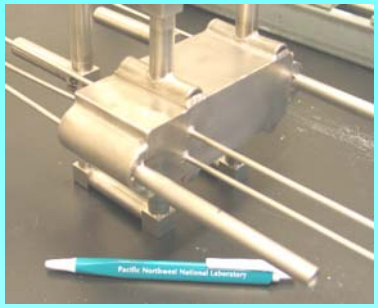

2 kWe Water-Gas Shift Reactor

Improved Thermal Efficiency
(85-90% effective recuperators)

10 kWe Steam Reformer

Reduced Thermal Mass
(fast temperature cycling)

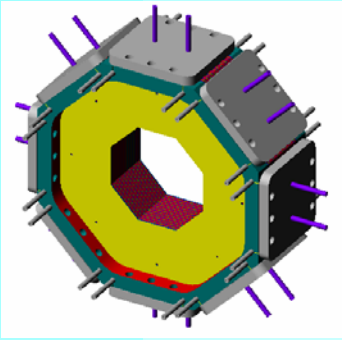

CO_2 Sorption Pump

Surface Forces Dominate
(reduced effects of gravity)

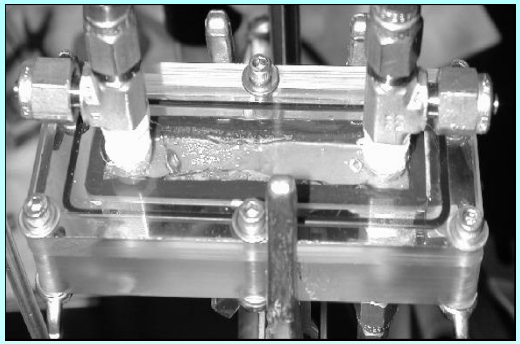

Single Channel Phase Separator

Reduced Effects of Diffusion
(catalysts operate at reaction limits)

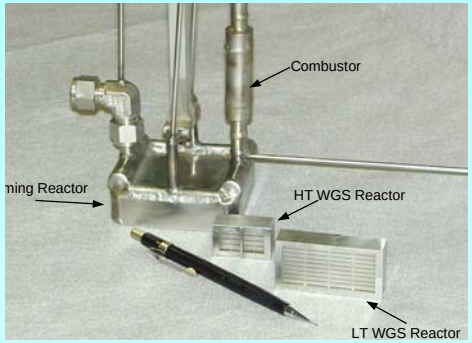

2 kWe Steam Reformer

Requirements for a Robotic Mars Sample Return and a TRL Level 5 Demonstration

Requirements

- 1000 kg of propellant
- 3.8:1 O_2 to CH_4 mass ratio
- 70 Earth-days of continuous production
- Operate in the Martian environment
  - 0.63 kPa Pressure, 182-242 K
  - 95.5% CO2, 2.7% N2, 1.6% Ar
  - Gravity = 3.71 m/s^2

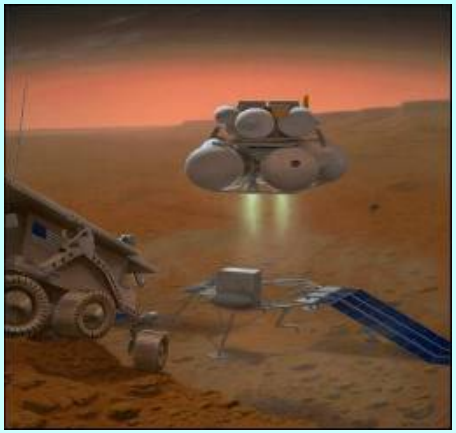

Target System

- Full scale production rate:
  - 125 g/hr CH_4
  - 475 g/hr O_2
- 1/10th operating time
  - 7 Earth-days of continuous healthy production
- Environmental chamber & select reduced gravity tests

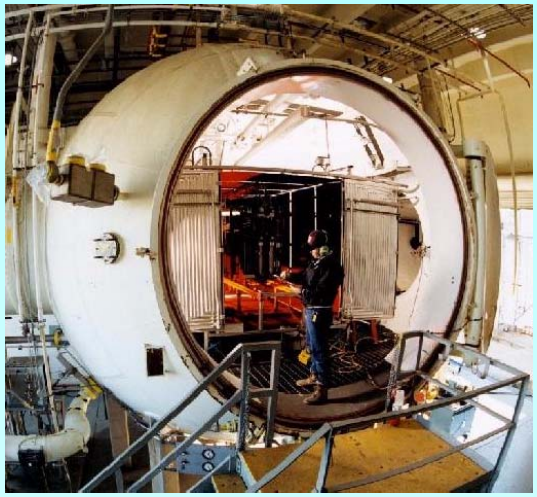

Microchannel ISPP System Process Flow

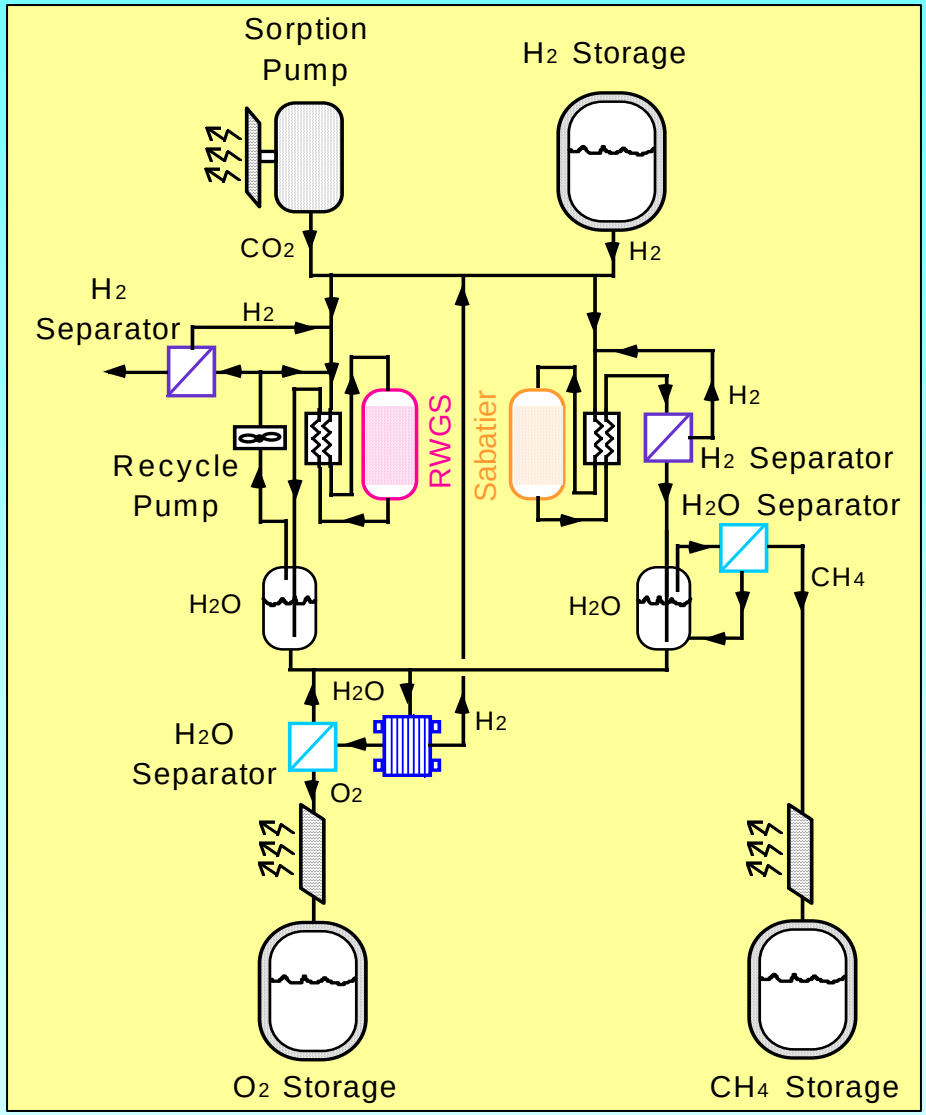

Microchannel Temperature Swing Sorption Pump

Photchemical Etched Shim for Multichannel Unit

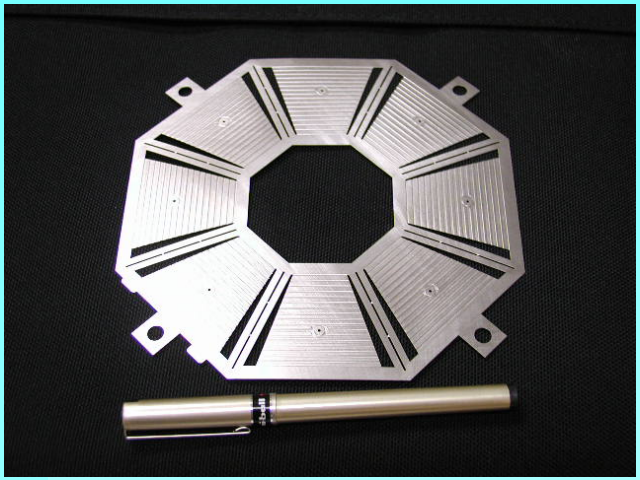

Design Drawing of Multichannel Unit

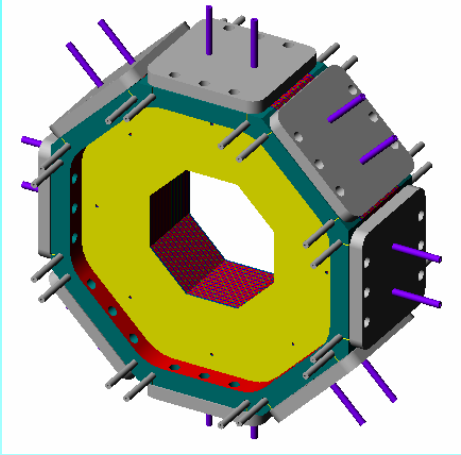

- Rapid thermal cycling of 8 cells results in near continuous operation
  - Cell 1 adsorbs CO_2 while Cell 5 desorbs CO_2
- Thermal recuperation heat requirements
  - Thermal fluid recovers heat from previously desorbed cells to minimize heating to current desorbing cell
- Mars ISPP will require increase the CO_2 pressure about 125-times done in 2 stages
- Two Sorption Pumps are being Diffusion Bonded Now

Single Channel CO_2 Adsorption Tests

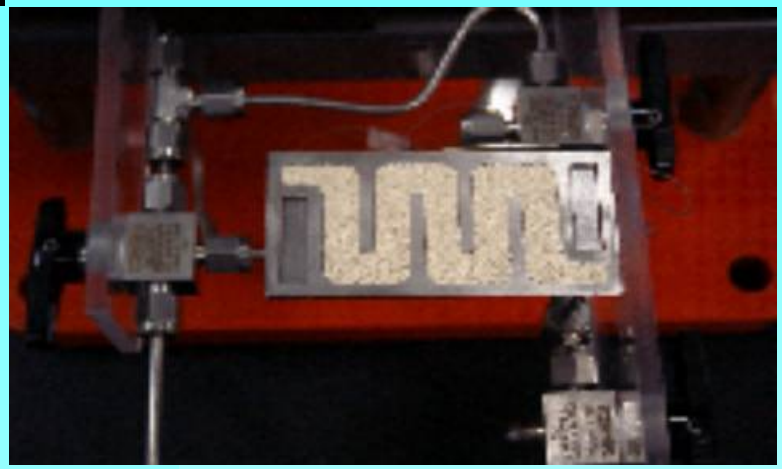

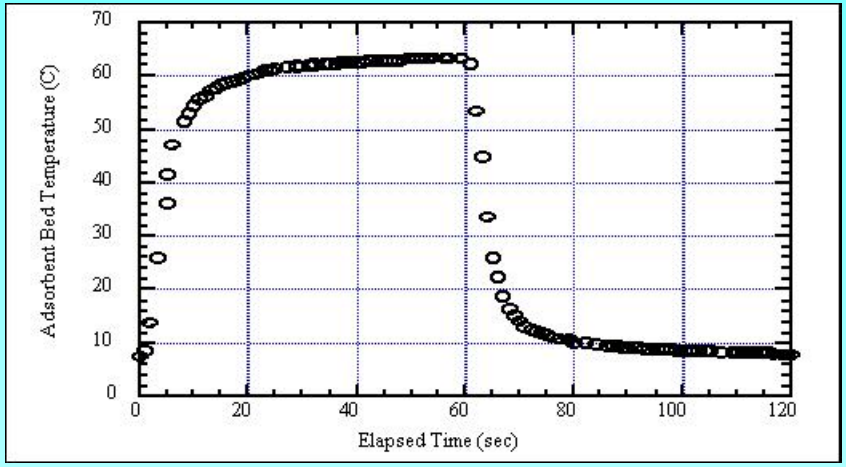

- Rapid cycle times reduces adsorbent volume (< 2 minutes)
- Operated within 93% of theoretic adsorption isotherm (12 to 77°C)

Microchannel Sabatier and RWGS Reactors

Microchannel RWGS Reactor

Throughput:
30 g/hr O_2
(1/8th Scale)

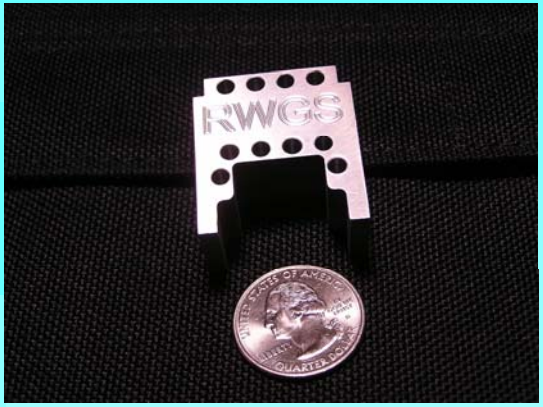

Microchannel Sabatier Reactor

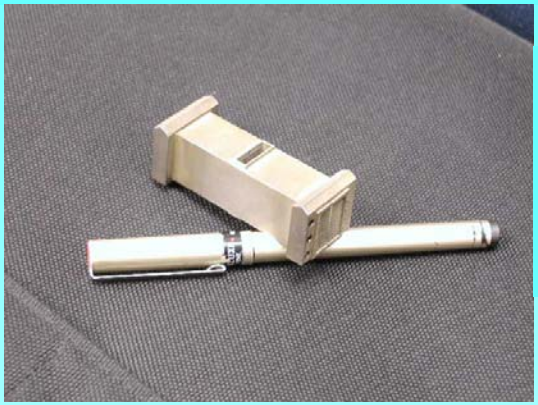

Throughput:
16 g/hr CH_4
32 g/hr O_2
(1/8th Scale)

- Design will consist of a Sabatier and RWGS reactor operated either in parallel or series
  - Maximize conversion and selectivity while maintaining a small device
- Endothermic RWGS reactor will be designed for maximum temperature and thermal recuperation
- Exothermic Sabatier reactor will be designed for optimal temperature profile: high temperature inlet, cooling to reduced exit temperature

Sabatier Catalyst Development

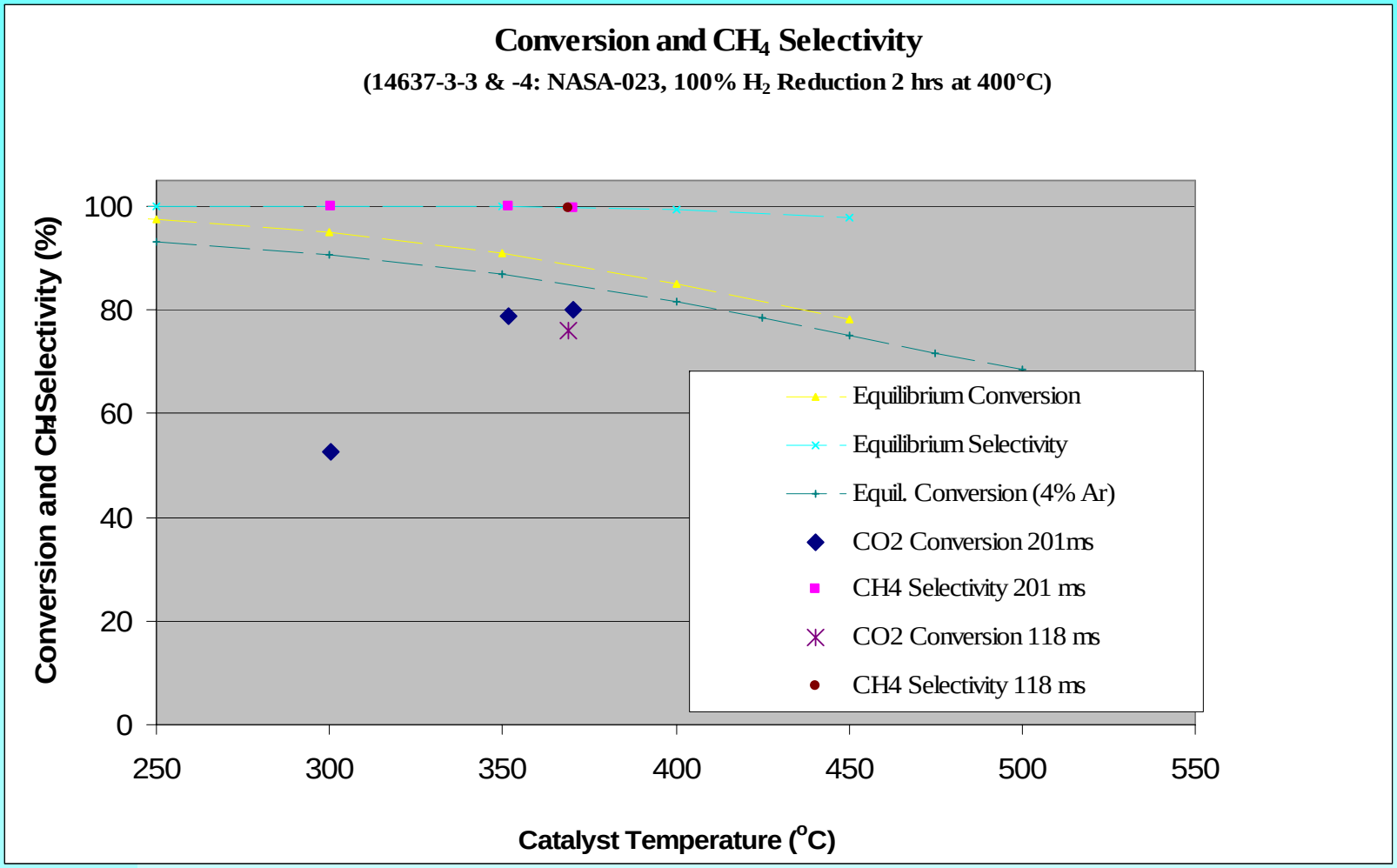

- Powdered Catalyst→Lifetime Testing→Engineered Catalyst
- Develop Sabatier robust catalyst with high activity/selectivity

RWGS Catalyst Development

NASA-027 14636-21 RWGS
Powdered CatReduced with pure H2 for 2hrs at 400°C

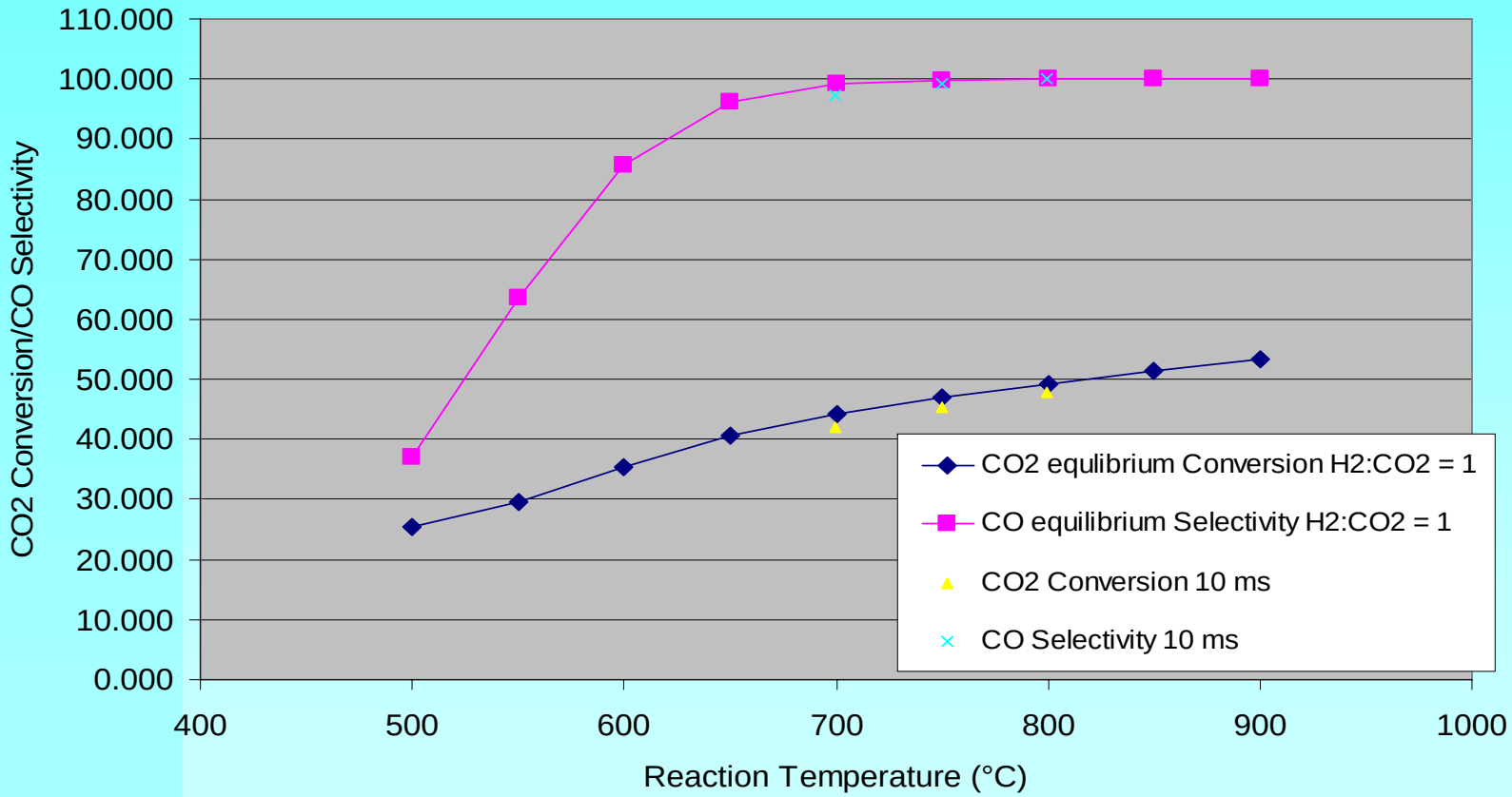

- Powdered Catalyst→Lifetime Testing→Engineered Catalyst
- Develop RWGS robust catalyst with high activity/selectivity

Microchannel Condenser/Phase Separator

Single Channel and Multichannel (5 kWe) Phase Separators for PEM Fuel Cell

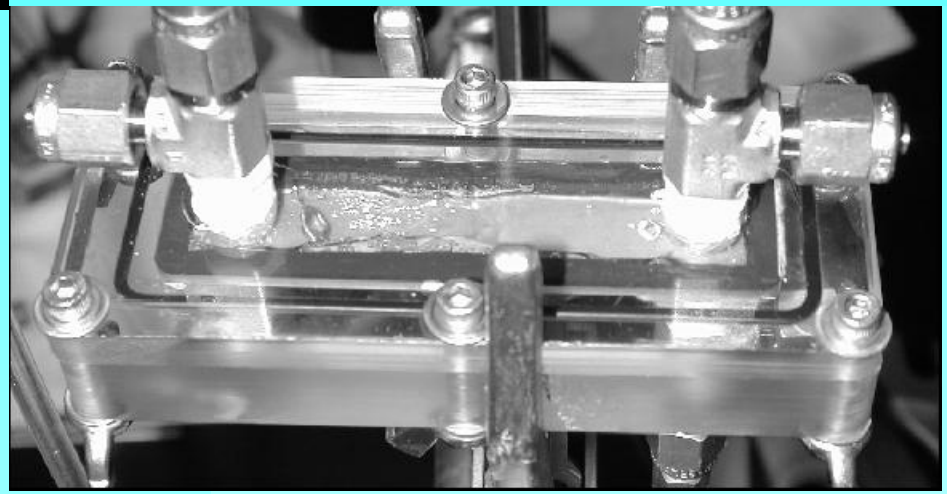

- Microchannel phase separators
  - Used after the reactors to collect water
  - Used with the electrolysis unit to separate water from gases
- Microchannel condenser/phase separators
  - Use increased surface area to provide cooling
  - Use combinations of capture, wicking, and pore throat structures within the microchannels to provide liquid recovery

Water Electrolysis System Development

Hamilton Sundstrand Electrolyzer

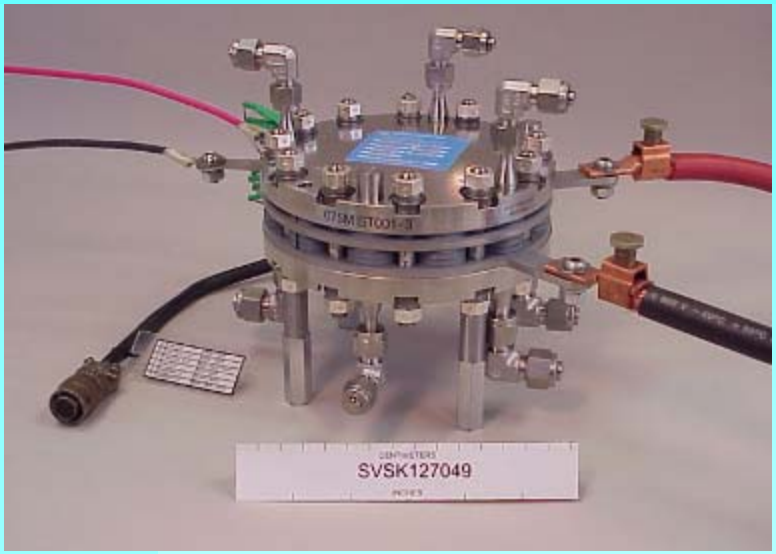

Phase 1: Hamilton Sundstrand
Liquid Anode Feed Water Electrolyzer

3-Cell Electrolysis Units

62 g/hour O_2 produced
(mass ratio of 569:1 H_2O:O_2 out)

8 g/hour H_2 produced
(mass ratio of 75:1 H_2O:O_2 out)

- JSC will develop and test a robotic-return scaled electrolysis system
  - Address previous system engineering issues including excessive water build-up and failure under vacuum testing.
  - Develop the Phase 2 system design that will be incorporated into the MIPPS system for integrated testing in the environmental chamber.

Battelle

Integrated System Design Issues

- Lower Operating Pressure versus Equipment Sizing
  - Higher pressure results in larger CO_2 sorption pump, smaller reactors/phase separators/gas separations
- Increased Recycle versus Reaction Conversion
  - Higher H_2 throughput results in higher conversion but larger recycle requirements
- System Complexity versus System Efficiency
  - Higher gas recovery requires additional components

Integrated System Testing

- All components will be integrated, including gas recycling
- Integrated system will be tested in an environmental chamber at JSC

Concept of Prototype System

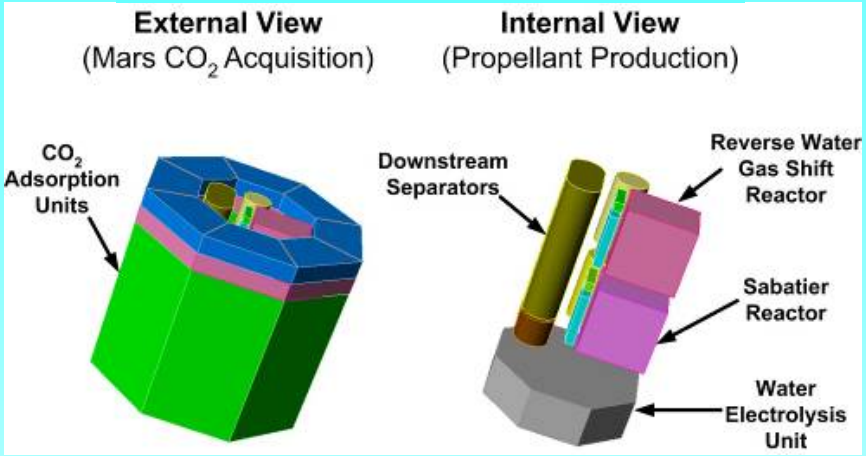

Lunar/Mars Dust Simulation & Bell Jars

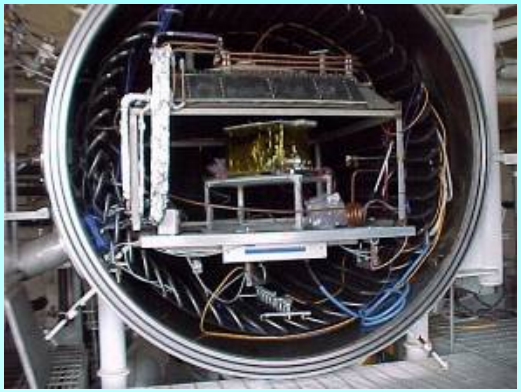

5 ft Dia. Lunar/Mars Simulation Chamber

20 ft Dia. Mars Env. Simulation Chamber

Initial System Sizing

CO_2 Sorption Pumps	10	kg	31%
RWGS Reactor	0.3	kg	1%
Sabatier Reactor	1.0	kg	3%
CO Removal	0.9	kg	3%
Membrane	0.3	kg	1%
Electrolysis Unit	16	kg	50%
Phase Separators	0.3	kg	1%
Recuperators	0.09	kg	0%
Pump	0.8	kg	2%
Compressor	0.6	kg	2%
Balance of Plant	2	kg	6%
Total	32	kg	
Specific Mass	**68**	kg/kg O2/hr	

Specific Mass from Previous Work:

Zubrin et. al. 123 kg/kg O_2/hr

Reddig et al. 309 kg/kg O_2/hr

Notional Mars ISRU Flight Demonstration & Mission Evolution

Pre (≤2009) | Early | Mid | Late

2011 | 2012 | 2013 | 2014 | 2015 | 2016 | 2018 | 2020 | 2022 | 2024 | 2026 | 2028

'01 Mars Odyssey
- Top 1m water content

'03 MER Rovers
- Surface regolith mechanics

'04 Mars Express
- Subsurface water content

'05 Mars Recon Orbiter
- Subsurface water content

'07 Phoenix
- Regolith [illegible] holes
- Volatiles [illegible]

2011-2013 Goal for Mars Application

[illegible] water, [illegible] spectrometer

Mars Science Drilling
- 10 m drill

Deep Drilling for Water
- Deep drilling >3000 m (aquifer at 270 K)

Regolith-Water ISRU Processing (small scale)
- Validate regolith-based resource collection & use for human mission
- Extract usable quantities of water

Regolith Processing for Manufacturing-Construction
- Validate regolith processing & material/metal separation for in-situ manufacturing & construction

In-Situ Manufacturing & Construction

Bio-Plant Growth
- Validate plant growth in regolith & use of Mars water

In-Situ Water

Mars Sample Return

In-Situ Consumable Production

Atm. ISRU Processing & Env. Compatibility
(small scale: MIP-PUMPP-MECA)

- Make measurements & validate ISPP hardware and materials in actual environment
- Validate atmosphere resource collection & use
- Validate propellant production & storage technology for sample return mission
- Perform dramatic demonstration to engage public (engine firing)

ISRU Human-Science Mission (mid scale)
- Utilize ISRU to extend science, mission objects or support other human precursor subsystems. Ex.
  - Hopper/Propulsion & EDL Demo
  - Surface Mobility/Fuel Cell Demo

ISRU Human Dress Rehearsal (large scale)
- Validate ISRU process to be used on human mission
- Extract usable quantities of water

Human Mission w/ ISRU LO_2 & Fuel Plant

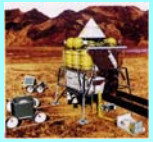

Launch
- ★ = Non-mission critical ISRU
- ★ = ISRU-Extended mission
- ★ = ISRU Enabled mission
- ▲ = Science mission launch
- ▲ = Return

Each mission increases in complexity and increases confidence in using ISRU

Barnett

MIPPS Technologies Target Applications

Primary Application

MIPPS Project will:
- Build Components
- Integrate and Test

*MIPPS technologies can also support the scenarios of either taking methane & seed H_2 to produce O_2 from in-situ CO_2 (requires taking CH_4 or other fuel instead of H_2) or utilizing in-situ CO_2 & H_2O

Other Applications

MIPPS Project will:
- Develop Models
- Evaluate Options
- Coordinate with life support team

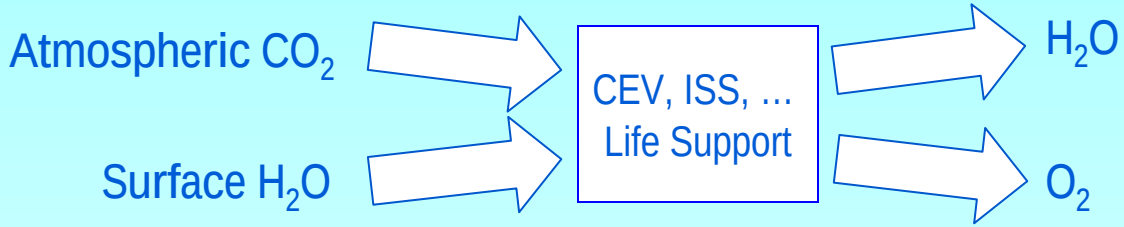

Battelle

System Comparison Between Life Support and MIPPS

LIFE SUPPORT

4 @ 250 mL/min/person O_2

- Condenser/Phase Separator
  - 200 slpm air flow
  - 1.5 g/min water collection
- CO_2 Sorption Pump
  - 1.2 g/min CO_2 collection
  - 200x purification
- Sabatier Reactor
  - 3.1 slpm gas flow
- Electrolyzer
  - 1.4 g/min O_2 generation

PROPELLANT PRODUCTION

Full-Scale Sample Return

(CH_4 & O_2 production using Mars CO_2 and Earth H_2)

- Condenser/Phase Separator
  - 21 slpm gas flow
  - 3.7 g/min water collection
- CO_2 Sorption Pump
  - 18 g/min CO_2 collection
  - 125x compression
- Sabatier Reactor
  - 22 slpm gas flow
- Electrolyzer
  - 7.8 g/min O_2 generation

Beyond MIPPS Phase II

- In-STEP Demonstration Options
  - Demonstrate life support system on ISS or Shuttle
    - CO_2 sorption pump, Sabatier reactor, and phase separators
  - Demonstration of sub-scale system on a Mars lander
- Move to TRL 6-7
  - Develop a prototypic Mars ISPP System
    - Integrate components
    - Reduce size of ancillary equipment
    - Evaluate “flight readiness” of hardware
  - Team with others to include microchannel components in CEV or lunar applications

Back Up Slides

Microchannel ISPP System

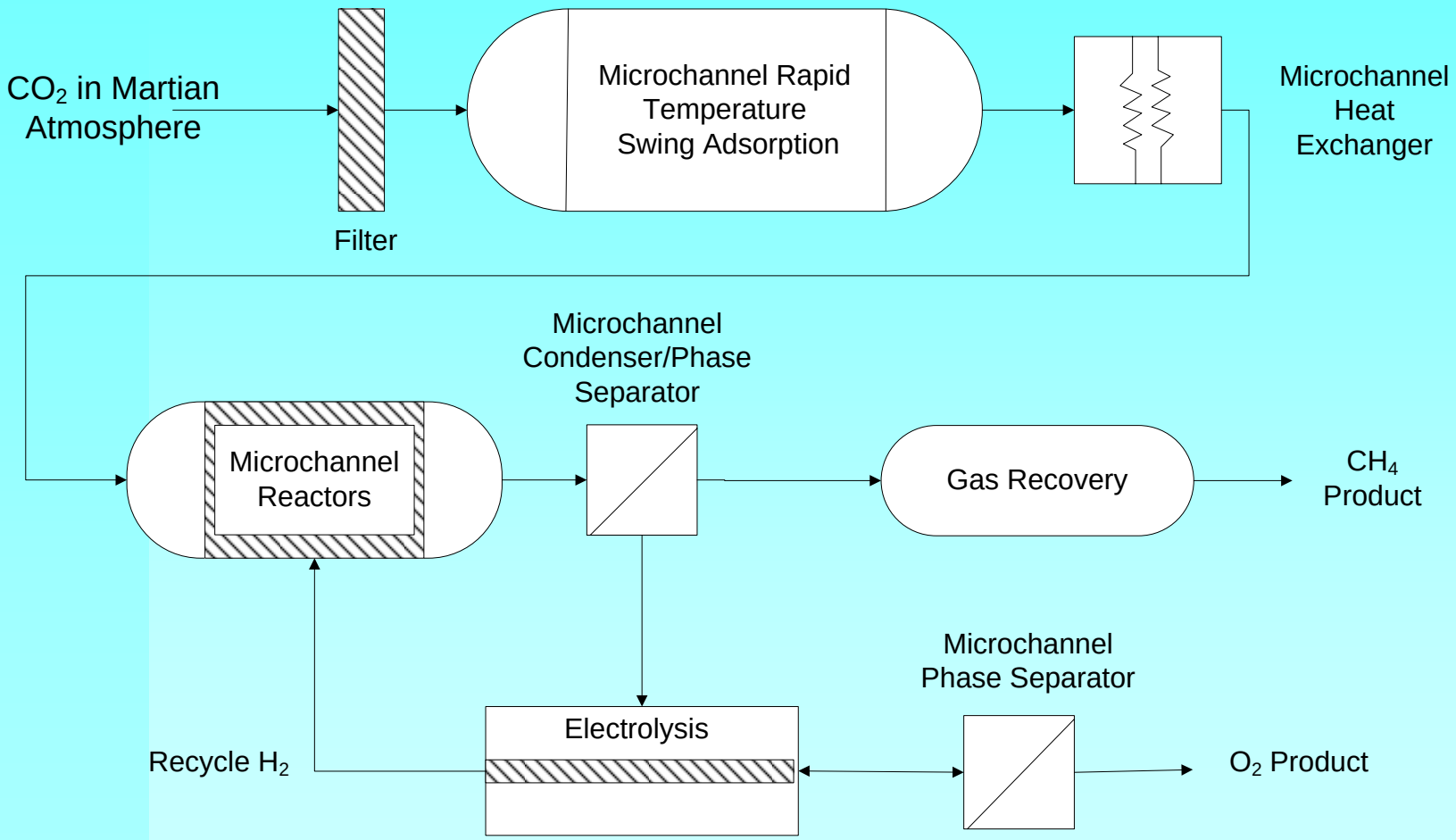

Life Support Consumables Regeneration

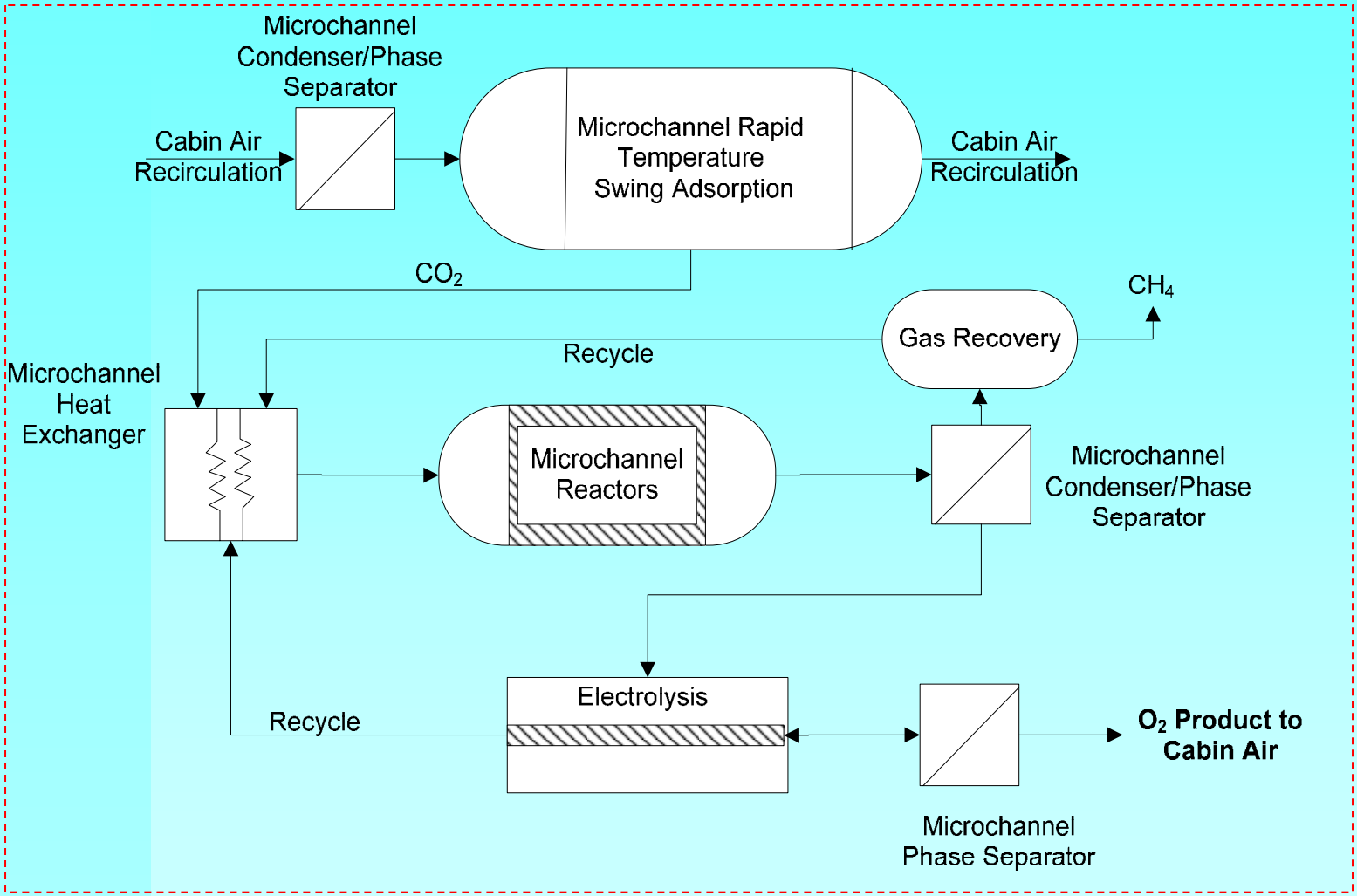

Similar technologies to MIPPS

Lunar Regolith Processing

(Hydrogen Reduction Oxygen Production Process)

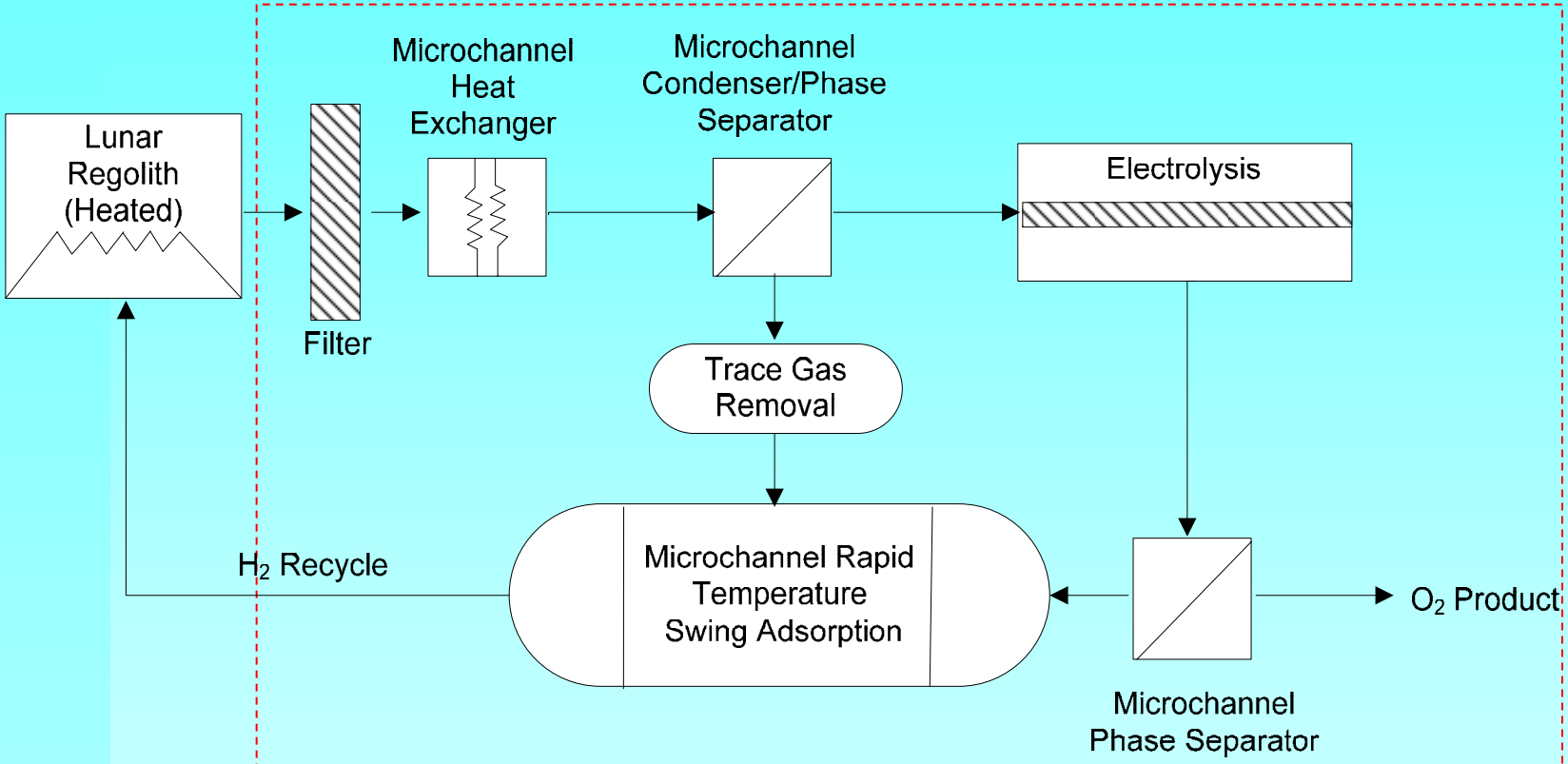

100 kg regolith yields ~2-6 kg O_2

Similar technologies to MIPPS

Phase I Activities

- April 2005 to March 2006
- Develop catalysts for RWGS and Sabatier reactor
- Fabricate, test, and integrate CO_2 sorption pump and RWGS and Sabatier reactors
  - Production Rate of 16 g/hr methane
  - Mass Ratio 3.8:1 CH_4:O_2
- Preliminary electrolysis system design & testing
- Identify gas phase separation techniques
- Preliminary model and system design
  - Mars ISPP, Lunar Regolith Processing, Advanced Life Support

Phase II Activities

- April 2006 to March 2009
- CO2 Sorption Pump
  - Model and optimize design for full-scale sample return production rate (OSU)
  - Evaluate adsorbents and construction materials
  - Test in environmental chamber under Martian conditions (JSC)
- RWGS and Sabatier Reactor
  - Model and optimize design (CSM)
  - Develop improved catalysts to meet lifetime and activity requirements
  - Test in reduced gravity for Mars, Lunar, and microgravity conditions (GRC)

Phase II Activities (Continued)

- Condenser/Phase Separator
  - Model and Optimize Design (GRC)
  - Test in Reduced Gravity for Mars, Lunar, and microgravity conditions (GRC)
- Develop Gas-Phase Separation Techniques
  - Proof-of-concept testing
  - Finalize approach
- Electrolysis Design
  - Phase II system to meet full-scale requirements
  - Evaluate a microchannel-based phase separator in microgravity
- Develop MEMs-based gas sensors and integrate into design (GRC)
- Integrate all components for an end-to-end test in the environmental chamber (JSC)