Mesoscopic Heat-Actuated Heat Pump Development

Kevin Drost, Michele Friedrich, Christine Martin, Jerry Martin
Battelle, Pacific Northwest Division
PO Box 999
Richland, WA 99352

Bill Hanna
Battelle Columbus Laboratories
505 King Avenue
Columbus, OH 43201

ABSTRACT

Battelle, Pacific Northwest Division (Battelle) and Pacific Northwest National Laboratory[1] (PNNL) are developing a miniature absorption heat pump. Targeted applications include microclimate control ranging from manportable cooling to distributed space conditioning. The miniature absorption heat pump will be sized to provide 350 W_t of cooling[2]. A complete manportable cooling system, which will include the microscale heat pump, an air-cooled heat exchanger, batteries, and fuel, is estimated to weigh between 4 and 5 kg. For comparison, alternative systems weigh about 10 kg. Size and weight reductions in the microscale heat pump are possible because the device can take advantage of the high heat and mass transfer rates attainable in microscale structures.

INTRODUCTION

In a number of microclimate control applications, individuals must wear protective clothing that significantly reduces heat transfer from the body. Examples include workers exposed to hazardous materials, police wearing body armor, and military personnel exposed to nuclear, biological or chemical (NBC) warfare agents. The threat from NBC warfare agents on the modern battlefield imposes a substantial burden on U.S. military forces. Present and future individual protective equipment for military personnel includes a protective suit. While such uniforms provide protection against hazards, they significantly decrease an individual's military effectiveness. Personnel performing labor intensive tasks in a hot environment are susceptible to heat stress, especially when wearing protective clothing. The time that can be spent performing essential tasks, before succumbing to heat injury, is limited under these conditions.

Supplemental cooling will permit tasks to be performed under hazardous conditions in hot climates with enhanced efficiency and reduced heat stress. Although cooling systems can be integrated with protective suits, presently available systems are too heavy to carry for extended periods. Currently proposed systems typically will provide between 130 and 190 W_t of cooling per kg of system weight (including fuel). This results in a complete system sized for 8-hour operation with a cooling capacity of 350 W_t weighing more than 10 kg.

Based on research at Battelle, a compact heat pump using a chemical compressor can provide 350 W_t of cooling, and weigh approximately 1 kg. When fuel, batteries, and an air-cooled heat exchanger are included, the complete system is projected provide 600 W_t of cooling per kg for a system weight that is between 4 and 5 kg. This is less than half the weight of a conventional microclimate control system. The Battelle manportable cooling system is shown in Figure 1.

The device will be primarily driven by thermal energy produced by the combustion of liquid hydrocarbon fuels. The energy storage density of liquid fuels exceeds the energy storage density attainable in conventional batteries by a factor of 130 (13,000 W_t/kg for liquid hydrocarbon fuel compared to 100 W_e/kg for batteries). A cooling system based on a chemical compressor still requires electric power to operate a liquid pump and fan, but its overall electric power requirements are approximately an order of magnitude lower than those of a conventional vapor compression system. The combination of reduced demand for electric power and the use of liquid fuels significantly reduces the weight of the primary energy source, compared to cooling schemes that require significant shaft work, such as vapor compression cycles.

In addition to manportable cooling, the miniature heat-actuated chemical heat pump can meet a number of important microclimate control and space conditioning requirements, including: 1) vehicle space conditioning; 2) distributed cooling of

[1] Battelle Memorial Institute operates Pacific Northwest National Laboratory for the U.S. Department of Energy.

[2] W_t is watts thermal; W_e is watts electrical.

buildings where the use of multiple small heat pumps eliminates the need for ducting systems, which typically waste 50% of the cooling produced by a central cooling system; 3) lightweight air-transportable space conditioning; and 4) autonomous cooling for shipping containers.

CONCEPT DESCRIPTION

The heat-actuated absorption and vapor compression heat pumps primarily differ in the way compression is provided. The absorption heat pump uses a chemical compressor in place of the mechanical compressor used in a vapor compression cycle. A chemical compressor uses thermal energy to desorb a high-pressure refrigerant (water) from a circulating liquid (lithium bromide). The refrigerant provides cooling and returns to the chemical compressor at a low pressure. The circulating liquid absorbs the refrigerant, and the mixture is compressed to a high pressure in the solution pump and returned to the desorber. Compared to the compressor in a vapor compression cycle, the solution pump provides the pressure increase by compressing an incompressible liquid rather than compressing a gas. Compression of an incompressible liquid typically uses 1% of the electricity needed to compress a similar mass of vapor to the same high pressure.

While several heat-actuated heat pump cycles have been investigated, research at Battelle is focused on a single-effect lithium bromide and water ($LiBr/H_2O$) absorption heat pump. As Figure 1 shows, a manportable cooler based on the mesoscopic absorption heat pump has dimensions of 20 cm x 22 cm x 8 cm.

By avoiding a mechanical compressor, the absorption heat pump uses components that rely on heat and mass transfer. This is advantageous because recent developments in microtechnology have demonstrated that extraordinarily high rates of heat and mass transfer can be attained in microstructures such as arrays of small (perhaps 100-micron-wide) channels. The high rates of heat and mass transfer available in microstructures can be used to radically reduce the size of the desorber, absorber and various heat exchangers used in an absorption heat pump.

The system uses a microchannel combustor developed for DARPA as the heat source for the desorber. The desorber uses a micromachined contactor to constrain the incoming solution to form an ultra-thin film. The micromachined contactor allows the desorbed refrigerant vapor to pass through while preventing the liquid solution from leaving the ultra-thin film. The absorber is similar to the desorber except that refrigerant vapor now passes through the micromachined contactor and is absorbed in the ultra-thin film of solution. The mesoscopic absorption heat pump includes a number of heat exchangers (evaporator, condenser and regenerative heat exchanger). Each of these devices uses microchannel geometry to obtain very high rates of heat and mass transfer.

The mesoscopic heat-actuated heat pump can be used in a range of applications. In some applications, such as vehicle cooling, electric power, thermal energy and a heat rejection system (the radiator) are already available so the mesoscopic heat pump shown needs few auxiliary devices to provide cooling. In this investigation we have chosen to focus on manportable cooling, which is significantly more challenging. The manportable cooler must be autonomous, which requires that the system have a source of fuel and electricity. In addition, a manportable cooler must have an air-cooled heat exchanger to reject thermal energy to the surroundings.

All vapor compression cycle concepts inherently require significant amounts of compressor work (on the order of 100- to 150-W_e) for manportable cooling applications. Assuming that electricity is used to provide compressor work, this results in a soldier having to either carry 4 to 7 kg of batteries or a 100- to 150-W_e electric power generation system. By using a heat-actuated cooling cycle, the Battelle mesoscopic absorption heat pump has radically reduced the requirements for electric power by substituting thermal energy for electric energy. While still requiring electric power to operate liquid pumps and fans, the overall electric power requirement for a heat-actuated heat pump is approximately 10% of the power requirements of a conventional vapor compression cycle heat pump.

SYSTEM DESIGN

The design of the mesoscopic heat-actuated cooling system involved a number of trade-off studies and design optimization. As a result of the trade-off studies, we developed detailed designs for two concepts, a system that used battery power for auxiliary equipment, and a system that includes a thermoelectric generator imbedded between the combustor and the desorber.

The desorption process operates at a relatively low temperature (less than 200°C). By reducing the temperature of the thermal energy generated in the combustor from 1200°C to 200°C, we have irreversibly dissipated a significant fraction of the potential of the energy source to do mechanical work. However, by installing a device between the combustor and the heat-actuated heat pump that converts thermal energy to electricity; for example, a thermoelectric material, electric power is generated by the thermal energy diffusing through the material, with no impact on the performance of the heat pump. Slightly more fuel will need to be combusted to provide for both the thermal energy and electric energy needs of the heat pump.

Thermoelectric materials are a direct energy conversion concept that does not operate in a cycle or include any moving parts. The materials are reliable and simple to use, but thermoelectric materials are inefficient in converting thermal energy to electricity. However, in this application, efficiency is not as important as in pure power generation applications. To meet the required thermal and electric loads of the manportable cooler, a thermoelectric material needs to have a minimum efficiency of 3.8%.

The current version of the combustor has combustion occurring in a central region with the products of combustion exiting through microchannels on either side of the combustion zone. Thermal energy is transferred by convection from the combustion products to the metal walls of the combustion channels and then by conduction through the thermoelectric material. The thermoelectric material is cooled by the desorption process in the ultra-thin film desorber in the manportable cooler.

The current design for the mesoscopic heat-actuated cooling system, with batteries for auxiliary power, is shown in Figure 1. A flow diagram for the system is presented Figure 2.The system includes a water-cooled condenser and absorber, a water heat source for the evaporator, and a microchannel combustor with exhaust gas at approximately 250°C as the desorber heat source.

Table 1 summarizes the weight of the two manportable cooler systems. The first system uses a battery to provide electric power for pumps and the fan, while the second system uses a thermoelectric generator to provide electric power. As Table 1 shows, the heat pump will have a weight of approximately 1000 g. The coefficient-of-performance (COP) of this heat pump is 0.68. COP is the ratio of the amount of cooling provided divided by the thermal energy supplied to the desorber. For the manportable design, 1 W of heat provided by combusting fuel would provide 0.68 W of cooling. This is comparable to an electrically driven heat pump COP of 2.8, if we assume that fuel must be consumed in a 25% efficient power generation system to provide compressor power.

As Table 1 shows, the use of a thermoelectric generator significantly reduces the weight of the system by eliminating the need for batteries.

The performance described above is a compelling example of the advantage of devices in the mesoscopic size range. The specific cooling (cooling per unit volume) of the miniature heat pump is higher than that of a conventional macroscopic absorption heat pump by a factor of 40 (0.8 W/cm^3 compared to 0.02 W/cm^3) for a macroscale device.

COMPONENT PERFORMANCE

This section describes the results of our ongoing research effort focused on development of components for the manportable cooler. Each component of the manportable heat pump is described below. Figure 3 shows typical examples of these components.

Absorber – LiBr and water solution enters the absorber and forms an ultra-thin absorbing film. The ultra-thin film (approximately 100 microns) is maintained by a proprietary micromachined structure. Refrigerant vapor passes through the micromachined structure and is absorbed in the weak solution. The absorption process results in a high rate of heat generation, which is subsequently removed from the solution by a microchannel heat exchanger. Figure 4 presents an overview of the absorption process. The water vapor at the interface where the vapor and solution is in contact, is the driving force for the absorption process and must equal the partial pressure of water in the solution at the interface. As the solution passes through the absorber, water diffuses through the thin film. It is important to keep the pressure drop across the micromachined contactor at a minimum so that the maximum vapor pressure is available to drive the absorption process.

Absorber performance is strongly dependent on the thickness of the mechanically constrained ultra-thin film. As Figure 5 shows, the reduction in the thickness of the thin film from 200 microns to 50 microns would reduce the length of the absorber by a factor of 16 while keeping the absorption rate constant. In addition, mechanically constrained absorption means that the absorber performance is independent of its physical orientation.

Battelle has developed and demonstrated the absorber, and preliminary results show that ammonia could be absorbed in water at a rate that generates between 10 and 30 W/cm^2. This is an extraordinary absorption rate that exceeds the performance of conventional absorbers by more than a factor of 10, and we expect to improve this level of performance significantly.

Desorber – Water and LiBr solution enters the desorber and forms an ultra-thin desorbing film. The ultra-thin film (with a film thickness of approximately 100 microns) is maintained by a micromachined contactor, which allows refrigerant vapor to evolve from the thin film. Thermal energy from a combustor can be used to heat the strong solution in the ultra-thin film, evaporating the refrigerant vapor from the solution at a faster rate. The refrigerant vapor passes through the micromachined structure and is transferred to the condenser.

Battelle has developed and demonstrated the desorber. Results show that water is desorbed from the strong solution at a rate of 0.2 g/cm^2/min. This exceeds the performance of conventional desorbers by a factor of 10.

Contactor Development - The desorber and absorber depend on the availability of micromachined contactors that will prevent liquids from passing though the contactor while having a minimum impact of the diffusion of water vapor. Battelle has evaluated a wide range of micromachined and other types of contactors. Data on breakthrough pressure (the pressure at which solution will pass through the contactor) and permeability (the mass transfer through the contactor as a function of pressure difference across the contactor) has been collected. Typical data is shown in Figure 6 (numbers refer to different contactor designs). Contactors located in the upper right hand corner of Figure 6 are desirable contactors with high breakthrough pressure and high permeability.

Evaporator - The evaporator consists of an array of microchannels with channel widths between 100 and 300 microns and channel depths up to 1 mm. Extensive experimental investigations of microchannel evaporation have been published by Battelle (Cuta et al. 1996). Results show that convective heat transfer coefficients of 1.0 to 2.0 W/cm^2-K are readily attainable, and heat transfer rates up to 100 W/cm^2 can be obtained with a small temperature difference. These heat transfer coefficients and rates exceed those of conventional evaporators by a factor of 4.

Condenser - The condenser also consists of an array of microchannels with channel widths between 100 and 300 microns and channel depths up to 1 mm. The microchannel condenser has been demonstrated by Battelle. Heat transfer rates in excess of 30 W/cm^2 were attained with a small temperature difference and low-pressure drop.

Regenerative Heat Exchanger - The regenerative heat exchanger consists of arrays of microchannels with channel widths between 100 and 300 microns and channel depths up to 1 mm. Extensive experimental investigations of single-phase microchannel heat transfer have been published by Battelle (Ravigururagan 1995). Convective heat transfer coefficients of 1.0 to 1.2 W/cm^2-K are attainable. These heat transfer coefficients exceed conventional regenerator performance by a factor between 3 and 6.

Combustor - Battelle has demonstrated a microchannel combustor for the Department of Defense Advanced Research Projects Agency (DARPA). The microchannel combustor can produce thermal energy at a rate of at least 30 W_t/cm^2, with a thermal efficiency between 82 and 85% (Drost et al. 1996). We plan to use the microscale combustor as the heat source for the miniature absorption heat pump.

Thermoelectric Generator (TEG) - Experiments were performed with the 20 W_e TEG sandwiched between a propane microchannel combustor and a microchannel heat exchanger. Ceramic wafers were placed on the upper and lower surfaces of the TEG to prevent electrical shorting of the elements that comprise the TEG. Thermocouples were placed to measure the temperatures on both sides of the TEG. Additional thermocouples were used to measure water temperature and the exhaust gas temperature from the microchannel combustor. Either the open circuit voltage across the TEG was measured or, in some cases, the voltage across a 0.3-ohm resistor connected across the TEG output leads was measured.

Under the best operating conditions we have obtained 16 W_e of power. The output of the TEG depends on the temperatures at which it is operating. Optimum conditions are for a hot side temperature of 250°C and a cold side temperature of 50°C. Under more typical conditions with the hot side at about 270°C and the cold side at 130°C, power production was about 12 W. By using other commercially available high temperature TEG materials we should be able to attain up to 26 W_e at our design cold side temperature.

CONCLUSIONS

By taking advantage of the high rates of heat and mass transfer attainable in microstructures, Battelle developed a mesoscopic heat-actuated heat pump with a cooling capacity of 350 W_t that weighs only 1 kg. Compared to a macroscale absorption heat pump, this was achieved with a reduction in volume by a factor of 40. System studies showed that the use of thermoelectric materials for auxiliary power generation signifies reduced weight relative to the use of batteries. A complete manportable cooling system, including the heat pump, an air-cooled heat exchanger, batteries, and fuel, is estimated to weigh between 4 and 5 kg, compared to the 10 kg weight of alternative systems.

ACKNOWLEDGEMENTS

The research reported in this paper was cofunded by the Department of Defense's Defense Advanced Research Programs Agency (DARPA) and the U.S. Department of Energy, through Pacific Northwest National Laboratory. Battelle Memorial Institute operates Pacific Northwest National Laboratory for the U.S. Department of Energy.

REFERENCES

Cuta, J.M., C.E. McDonald, and A. Shekarriz. 1996. "Forced Convection Heat Transfer in Parallel Channel Array Microchannel Heat Exchangers." Advances in Energy Efficiency, Heat/Mass Transfer Enhancement PID-Vol.2 HTD-Vol.338, American Society of Mechanical Engineering, New York.

Drost, M.K. C.J. Call, J.M. Cuta, and R.S. Wegeng. 1996. "Microchannel Integrated Evaporator/Combustor Thermal Processes." Presented at 2nd U.S Japan Seminar in Molecular and Microscale Transport Phenomena, August 8-10, Santa Barbara, California.

Ravigururajan, T.S., J. Cuta, C. McDonald and M.K. Drost. 1996. "Single Phase Flow Thermal Performance of a Parallel Micro-Channel Heat Exchanger." Presented at American Society of Mechanical Engineers 1996 National Heat Transfer Conference. American Society of Mechanical Engineers, New York.

Table 1 Miniature Chemical Heat Pump Characteristics

	NiCd Battery	PbTe TEG
Heat Pump	0.92	1.18
Radiator	0.85	0.83
Fan	0.65	0.65
Battery	1.07	0.03
TEG	0.00	0.18
Structure	0.47	0.47
Pumps/Fluids	0.43	0.43
Fuel/Tank	0.54	0.68
Electronics	0.22	0.22
Total, kg	**5.144**	**4.675**

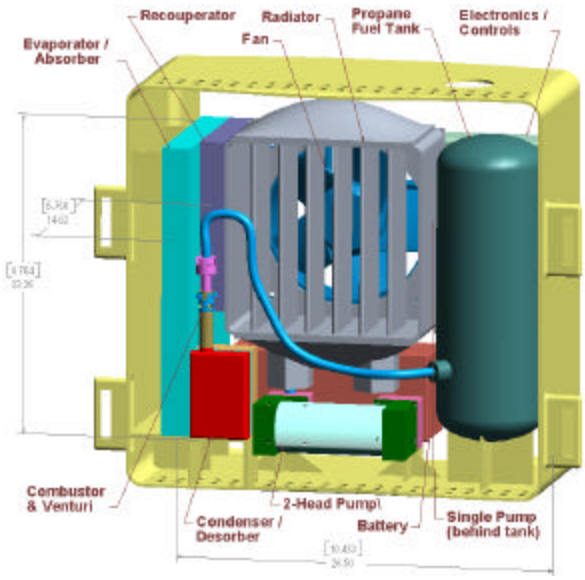

Figure 1 Manportable Cooler

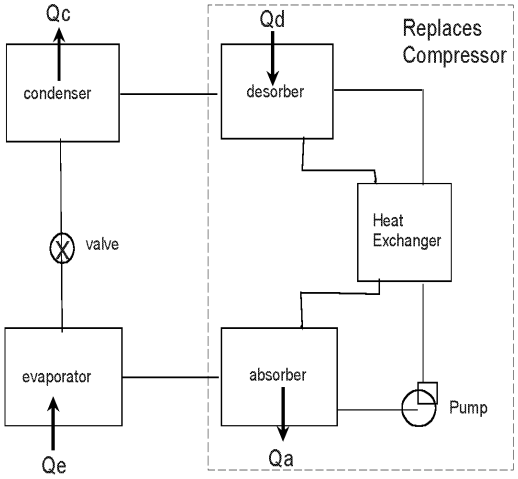

Figure 2 Single-Effect Absorption Cycle Chiller

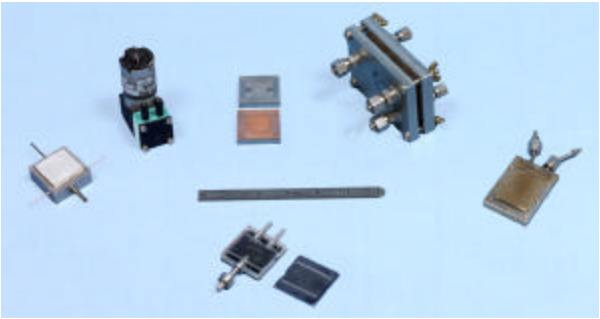

Figure 3 Absorption Heat Pump Components

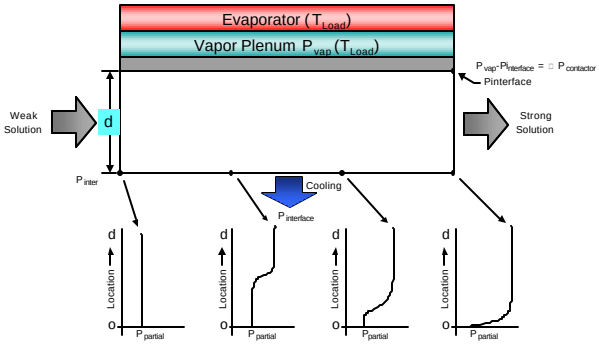

Figure 4 Ultra-Thin Film Absorption Processes

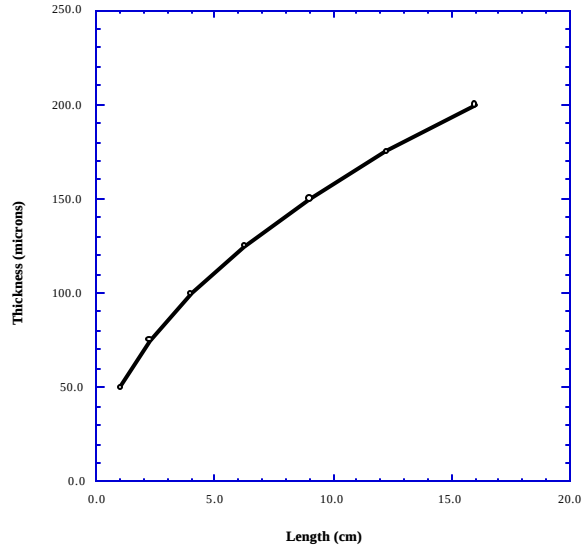

Figure 5 Impact of Film Thickness on Absorber Length

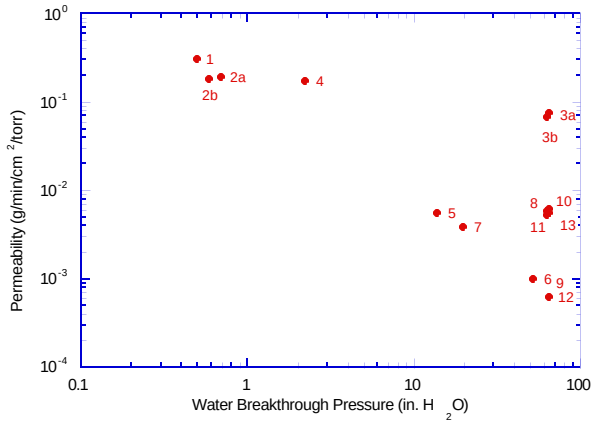

Figure 6 Permeability vs. Supported Liquid Pressure