Microreactor System Design for NASA In Situ Propellant Production Plant on Mars

W.E. TeGrotenhuis, R.S. Wegeng, D.P. Vanderwiel, G.A. Whyatt,
V.V. Viswanathan, K.P. Schielke
Pacific Northwest National Laboratory, Richland, Washington 99352

G.B. Sanders and T.A. Peters
Johnson Space Center, NASA, Houston, Texas

Abstract

The NASA In Situ Resource Utilization (ISRU) program is planning near-term missions to Mars that will include chemical processes for converting the carbon dioxide and possibly water from the Martian environment into propellants, oxygen, and other useful chemicals. The use of indigenous resources reduces the size and weight of the payloads from Earth significantly, representing enormous cost savings that make human exploration of Mars affordable. Extraterrestrial chemical processing plants will need to be compact, lightweight, highly efficient under reduced gravity, and extraordinarily reliable for long periods. Microchemical and thermal systems represents capability for dramatic reduction in size and weight, while offering high reliability through massive parallelization. In situ propellant production (ISPP), one aspect of the ISRU program, involves collecting and pressurizing atmospheric CO_2, conversion reactions, chemical separations, heat exchangers, and cryogenic storage. A preliminary system design of an ISPP plant based on microtechnology has demonstrated significant size, weight, and energy-efficiency gains. Energy management is a strong driver for Mars-based processes, not only because energy is a scarce resource but also because heat rejection is problematic; the low-pressure environment makes convective heat transfer ineffective. Energy-efficiency gains are largely achieved in the microchemical plant through extensive heat recuperation and energy cascading, which has a small size and weight penalty because the added micro heat exchangers are small. This leads to additional size and weight gains by reducing the required area of waste heat radiators. Aspects of the microtechnology-based ISPP plant are described in detail, including three options for thermochemical compression of CO_2 from the Martian atmosphere, Sabatier and reverse water gas shift reactors, heat exchange, and chemical separations. Results of the system design are compared to the existing NASA baseline that is based on conventional technologies.

Microchemical and Thermal Systems

For several years, researchers at Pacific Northwest National Laboratory have been developing micro chemical and thermal systems (MCTS) that are extraordinarily compact and light compared with conventional process technology. Performing thermal and chemical processing in microchannels that are on the order of 100 microns facilitates extremely rapid heat and mass transfer rates that allow for orders of magnitude reduction in hardware volume and mass. Features are now designed with resolutions approaching 1–10 μm in microtechnology devices (Harvey et al. 1995). At this scale, the distances for heat and mass transfer can be uniformly minimized, giving extremely rapid transport rates that result in very short residence times and high throughput per unit hardware volume (Bowers and Mudawar 1993; Kleiner et al. 1995). For example, microchannels can be stacked to form efficient multi-pass reactors, thereby increasing performance without added pressure and energy requirements. In addition, process conditions can be more tightly controlled. As all elements of traditional chemical processes are achieved using microtechnology, including heat exchangers, reactors, and separators, entire chemical processes can be miniaturized.

Another inherent advantage of MCTS technology is high system reliability through massive parallelization, which can be critical for high-risk applications such as in space. The natural MCTS architecture is arrays of microchannels assembled into cells that are further headered together within a device, with multiple parallel devices included in a

system. Therefore, overall system failure does not occur if one component, cell, or device fails, nor are integral multipliers required on the system to provide backup against failures.

Furthermore, the size scale and parallelization of MCTS offers versatility in designing integrated systems that normally limits conventional technologies. For example, adding an additional recuperative heat exchanger or thermally integrating two otherwise independent processes does not necessarily imply large capital, size or weight penalties. Consequently, capital cost or size versus efficiency trade-offs often favors a much more highly integrated, efficient flowsheet.

Finally, processing fluids in microchannels can also dramatically change the governing physics. In particular, gravitational forces become secondary to surface, interfacial, and hydrodynamic forces. Therefore, a MCTS technology very naturally overcomes the challenges and limitations of operating in reduced gravity and micro gravity environments.

Microchemical ISPP Plant

The ISPP plant will collect and compress CO_2 from the Martian atmosphere, convert the CO_2 to propellant and oxygen through reactions with hydrogen brought from Earth, and purify and cryogenically store the products until needed. The propellant and oxygen are subsequently used for ascent from Mars and for return trips to earth. This novel approach of producing needed materials from available resources, often referred to as "living off the land," has the potential for enormous savings over the traditional approach of transporting everything from Earth. Although estimates in savings depend strongly on the specific mission or program, there is general agreement that continued manned exploration of our solar system requires in situ resource utilization to be affordable (Frankie and Zubrin 1999). The specific objective for the ISPP plant described here is production of propellant and oxygen required for the return trip of a manned mission to Mars. One scenario would have the plant arrive on Mars two years before the manned mission and produce sufficient materials over 330 days of unattended operation prior to the astronauts departing from Earth. The production rates are 2.4 kg/hr of O_2 and 0.73 kg/hr of CH_4 to support one Mars Ascent Vehicle.

A schematic of one version of the ISPP plant is shown in Figure 1. In this version, the CO_2 is thermochemically compressed using a temperature-swing absorption system. Primary conversion of CO_2 is obtained by reaction with H_2 in a Sabatier reactor to produce methane and water in a 2:1 molar ratio. Water is recovered and decomposed through high-temperature electrolysis to produce oxygen and allow recycle of hydrogen. Propulsion requires a higher fuel to oxygen ratio than what is produced through Sabatier alone, so reverse water gas shift is added to produce additional oxygen, with CO as a waste byproduct. In this version, membranes and cryogenic distillation are used to purify products and allow recycle of reactants. The schematic also includes two heat engines to produce the electricity needed for electrolysis and mechanical equipment, one heat engine that provides heat for desorption in the CO_2 compression system and the other that radiates waste heat. A heat pump is included to support heat rejection to the environment, which is challenging because of negligible convective heat transfer in the sparse environment. There are several alternatives for subsystems of the plant, some of which are described below.

The schematic in Figure 1 is simplified but illustrates some important aspects of a microtechnology-based ISPP plant. High energy-efficiency is achieved through extensive recuperation and energy cascading from hot unit operations to cold operations, thereby minimizing the thermal and electrical demands as well as waste heat, which is equally problematic on Mars due to the negligible convective heat transfer in the sparse atmosphere. A good example of this is using waste heat from a heat engine to power the desorber in the thermochemical CO_2 compressor. MCTS architecture also facilitates higher efficiency through integration. Pinch analysis dictates that using the heat generated in the exothermic Sabatier reactor in the second heat engine cycle ultimately reduces the high temperature energy demand as well as the heat rejection load. Preliminary volume estimates for the system suggests that the waste heat radiators are likely to be the largest components in the system. Hence, reducing the waste heat load has a significant impact on system size.

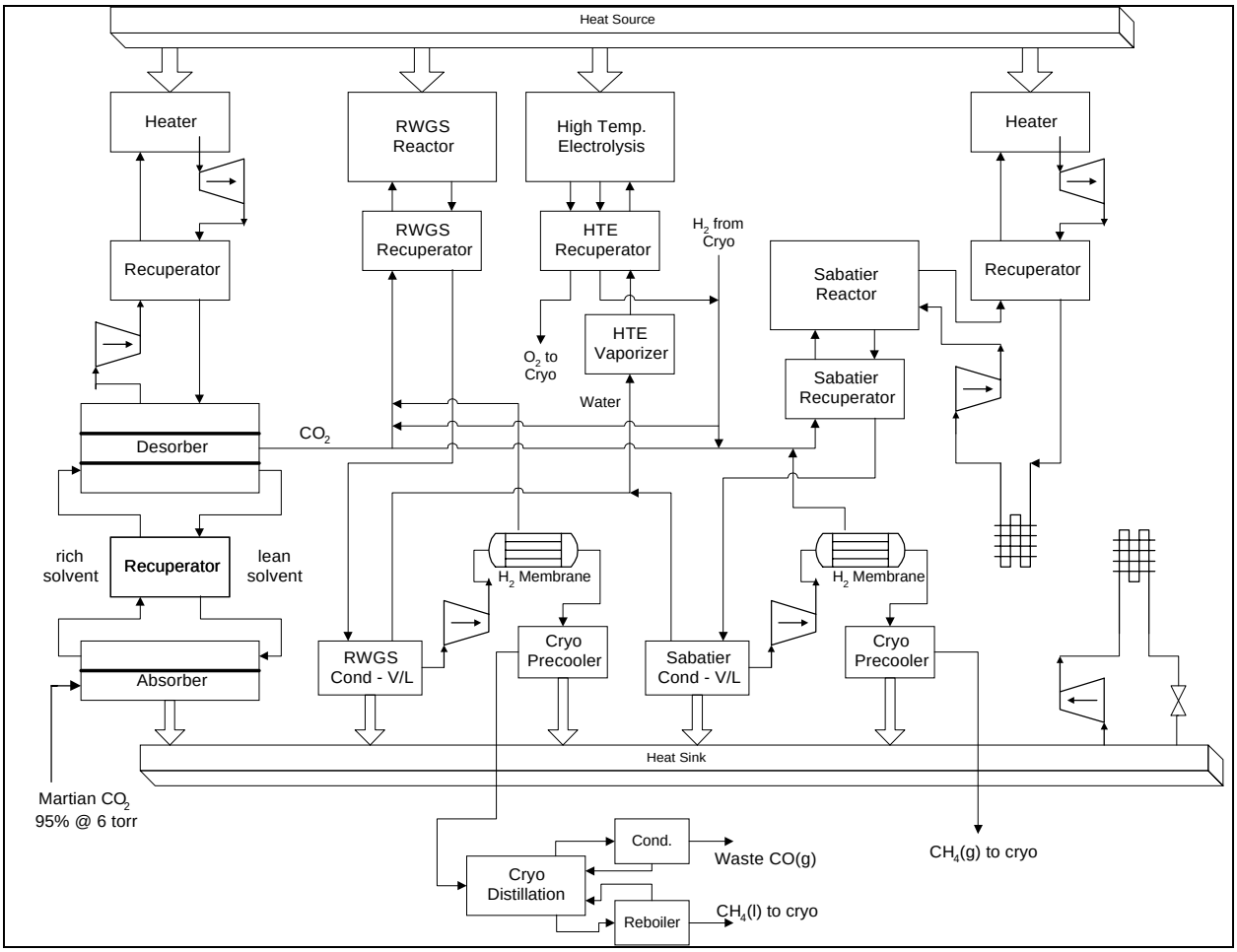

Figure 1. Schematic of a Microtechnology-Based ISPP Plant for Mars to Produce Propellants, Oxygen, and Other Chemicals

Although the full potential of MCTS technology for reducing size and weight and improving efficiency is realized through system integration, the advantages are significant even with minimal integration. The Human Mars reference mission (Hoffman and Kaplan 1997; Drake 1998) includes a nuclear reactor for producing electricity, and integrating the waste heat generated with the ISPP plant may not be practicable. However, the dramatic potential for reducing hardware volume through MCTS technology remains.

CO_2 Compression

The Martian atmosphere is 6-10 torr, ranges in temperature from 100–250K, and contains approximately 95% CO_2. Therefore, the first step of a process is to collect and compress the CO_2 to a reasonable operating pressure, and a conventional mechanical compressor is not tractable. Three alternatives for thermochemical compression under consideration are absorption, adsorption, and freeze-thaw.

Temperature-swing absorption utilizes a chemical sorbent in a nonvolatile solvent to sorb the CO_2 at low pressure and temperature, which is then heated up to release the CO_2 at high pressure. By recuperating the hot and cold solvent streams in a microchannel heat exchanger, high thermal efficiency is possible. A mechanical pump that pressurizes the solvent between the absorber and desorber supplies work. The primary issues are size and weight of system, achievable compression ratio per stage, and solvent loss at ambient Martian environmental conditions. Preliminary sizing of an absorption system based on diethanol amine in polyethylene glycol, a nonvolatile solvent,

estimates an 85-liter, 470-kg system for compressing CO_2 to 1 bar at 150°C to support the manned mission. The system is dominated by the absorber because of low molecular diffusivity in the solvent at the low temperature.

An adsorption based CO_2 compressor requires cyclical processing where one or more beds of an adsorbing material is alternately cooled to adsorb CO_2 at low temperature and pressure and heated to desorb at a higher temperature and pressure. The extremely rapid and efficient heating and cooling that is possible in microchannel devices provides the potential for dramatically higher cycling frequency and therefore increased productivity per unit hardware volume. However, temperature cycling of the thermal mass and difficulties in recuperating heat creates challenges for making adsorption systems thermally efficient.

The freeze-thaw CO_2 compression system operates on the principle of reducing the Mars atmospheric CO_2 to a solid phase and then heating to establish an elevated downstream pressure. The details of the system include a tank with an attached cryocooler operating at 150K. Atmospheric CO_2 is forced into the tank and is subsequently cooled down below its freezing point. Once enough CO_2 is frozen, the cryocooler is shut down, and heat can be applied to bring the CO_2 up to its triple point. At the triple point, the CO_2 will sublimate at approximately 75 psia and can be regulated for use in the ISRU system downstream. This technique provides an efficient way to provide CO_2 at 75 psia with no pumps or additional energy to the system.

Chemical Reactors and Heat Exchangers

The intrinsic kinetics of chemical reactions is much more readily realized in microreactors, resulting in very compact hardware. Based on 100 msec and 32 msec residence times for Sabatier and reverse water gas shift the reactors are projected to be 10 liters and 6 liters, respectively, with empty masses of 52 and 32 kg. Power densities for microchannel heat exchangers are projected to range from 10–120 kW/L, and the total volume of heat exchangers for the ISPP plant in Figure 1 is projected to be less than 300 mL. Reactors and heat exchangers are expected to compose only about 10% of the total system mass.

Separations

Phase separations and chemical separations are important for water recovery, product purification for cryogenic storage, and reactant recycle. Chemical processes that normally rely on gravity can be performed in microchannels that are engineered at sufficiently small dimensions to take advantage of interfacial, surface, and hydrodynamic forces to achieve the same purposes with compact, lightweight, efficient hardware. To accomplish phase separations, a dispersed fluid phase is removed or recovered from a second immiscible phase using only capillary and surface forces. Chemical separation microtechnologies under development include gas absorption, solvent extraction, and distillation.

Preliminary Comparisons

A comprehensive system analysis was completed for the flow sheet illustrated in Figure 1, including preliminary size and mass calculations for major components and subsystems. The scope of the analysis did not include cryogenic systems, and only order-of-magnitude calculations were available in some cases where the technology is immature, such as high-temperature electrolysis. The analysis concluded that a microtechnology-based ISPP plant for a manned mission to Mars would require approximately 860 kg of equipment, including heat rejection and sorbent materials but excluding power systems, cryogenic storage systems, and raw materials. The breakdown of the total mass by subsystem is shown in Figure 2, with comparisons to NASA's reference mission (Bowers and Mudawar 1993; Kleiner et al. 1995). Figure 2 illustrates that a MCTS approach has the potential to reduce hardware mass by over 50%. Furthermore, the CO_2 compression system, which dominates system mass, could be dramatically reduced in mass in the micro ISPP plant by choosing a sorbent system with higher diffusivity. The energy demands of the ISPP plant are 14 kW of electrical power and 19 kW of high temperature thermal energy compared with 32 kW of electrical energy called for by the NASA reference missions (Bowers and Mudawar 1993; Kleiner et al. 1995). Although the total energy demand is nearly identical, the use of lower exergy thermal energy in the Micro ISPP plant opens up alternatives for integrated power systems.

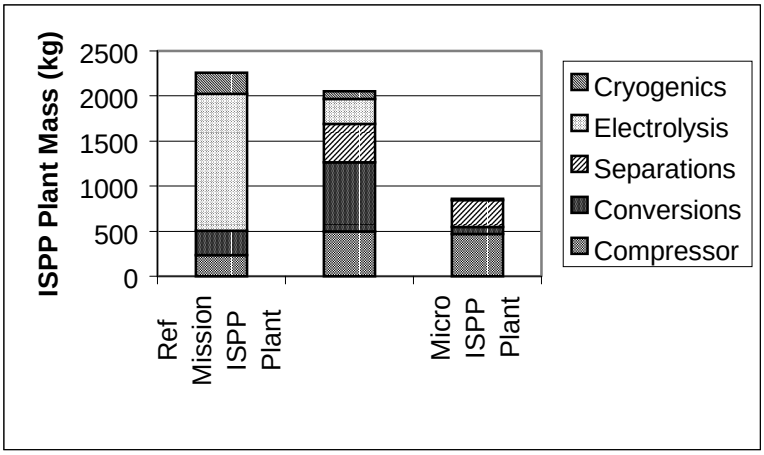

Figure 2. Estimated Subsystem Masses for a Microtechnology-Based ISPP Plant Compared with Projected Masses from the NASA Reference Mission (Hoffman and Kaplan 1997; Drake 1998)

Conclusions

Although MCTS technology is still new and emerging, tremendous size, weight, and efficiency advantages that are being realized for other application areas, such automotive fuel processing and man-portable cooling, represent tremendous potential for continued space exploration as ISRU concepts become a reality.

Acknowledgment

Pacific Northwest National Laboratory is operated by Battelle for the U.S. Department of Energy under Contract DE-AC06-76FLO 1830.

References

Bowers M and I Mudawar. 1993. "High Flux Boiling in Low Flow Rate, Low Pressure Drop Mini-Channel and Micro-Channel Heat Sinks." *Int. J. Heat Mass Trans*. *3*, 321–332.

Drake BG, ed. June 1998. "Reference Mission Version 3.0, Addendum to the Human Exploration of Mars: The Reference Mission of the NASA Mars Exploration Study Team." NASA EX13-98-036.

B.M. Frankie and R. Zubrin, "Chemical Engineering in Extraterrestrial Environments", Chem. Eng. Prog. *95*(2), 45-54 (1999).

Harvey E, P Rumsby, M Gower, and J Remnant. 1995. "Microstructuring by Excimer Laser." *Proceedings of the SPIE Conference on Micromachining and Microfabrication Process Technology*.

Hoffman SJ and DL Kaplan, eds. July 1997. "Human Exploration of Mars: The Reference Mission of the NASA Mars Exploration Study Team." NASA SP-6107.

Kleiner M, K Stefan, and K Haberger. September 1995. "High Performance Forced Air Cooling Scheme Employing Microchannel Heat Exchangers." *MicroSim 95*, Southampton.