Recent Developments in Microtechnology-Based Chemical Heat Pumps

M. Kevin Drost, Michele Friedrich, Christine Martin, Jerry Martin, Rick Cameron

Pacific Northwest National Laboratory,[a] P.O. Box 999, Richland, WA 99352 USA

Abstract

Pacific Northwest National Laboratory (PNNL) has an ongoing program focused on the development of compact chemical heat pumps based on the absorption cycle. Design and laboratory data suggest that, by taking advantage of the high rates of heat and mass transfer available in microstructures, we are able to radically reduce the size of a heat-actuated heat pump based on the absorption cycle. Current estimates suggest a size reduction of a factor of 60 compared with a conventional heat pump. High performance is achieved by using microchannel combustor technology, microchannel heat exchangers and ultra-thin-film micromachined contactors. Currently all of the components of the system have been demonstrated and PNNL is assembling a complete bench-scale version of the device. Successful development of this technology will enable a new class of compact, heat-actuated space conditioning systems that can be used for portable or distributed heating and cooling.

Introduction

In a number of microclimate control applications individuals must wear protective clothing, which significantly reduces heat transfer from the body. Examples include workers exposed to hazardous materials, police wearing body armor, and military personnel exposed to nuclear, biological, or chemical (NBC) warfare agents. The threat from NBC warfare agents on the modern battlefield imposes a substantial burden on U.S. military forces. Present and future individual protective equipment for military personnel includes a protective suit. While such uniforms provide protection against hazards, they significantly decrease an individual's military effectiveness. Personnel performing labor intensive tasks in a hot environment are susceptible to heat stress, especially when wearing protective clothing. The time that can be spent performing essential tasks before succumbing to heat injury is limited under these conditions.

[a] Pacific Northwest National Laboratory is operated by Battelle for the U.S. Department of Energy under Contract DE-AC06-76RLO 1830.

Supplemental cooling will permit tasks to be performed under hazardous conditions in hot climates with enhanced efficiency and reduced heat stress. Although cooling systems can be integrated with protective suits, presently available systems are too heavy to carry for extended periods. Typically, a complete conventional system sized for eight-hour operation with a cooling capacity of 350 W_t weighs more than 10 kg.

Based on research at PNNL, a compact heat pump using a chemical compressor can provide 350 W_t of cooling and weighs approximately 1 kg. When fuel, batteries, and an air-cooled heat exchanger are included, the complete system is projected to weigh between 4 and 5 kg, less than half the weight of a conventional microclimate control system. The system is shown in Figure 1.

The device will be primarily driven by thermal energy produced by the combustion of liquid hydrocarbon fuels. The energy storage density of liquid fuels exceeds the energy storage density attainable in conventional batteries by a factor of 130 (13,000 W_t/kg for liquid hydrocarbon fuel compared with 100 W_e/kg for batteries). A cooling system based on a chemical compressor still requires electric power to operate a liquid pump and fan, but its overall electric power requirements are approximately an order of magnitude lower than those of a conventional vapor compression system. The combination of reduced demand for electric power and using liquid fuels significantly reduces the weight of the primary energy source compared with cooling schemes that require significant shaft work, such as vapor compression cycles.

In addition to manportable cooling, the miniature heat-actuated chemical heat pump (Figure 1) can meet a number of important microclimate control and space conditioning requirements, including 1) vehicle space conditioning; 2) distributed

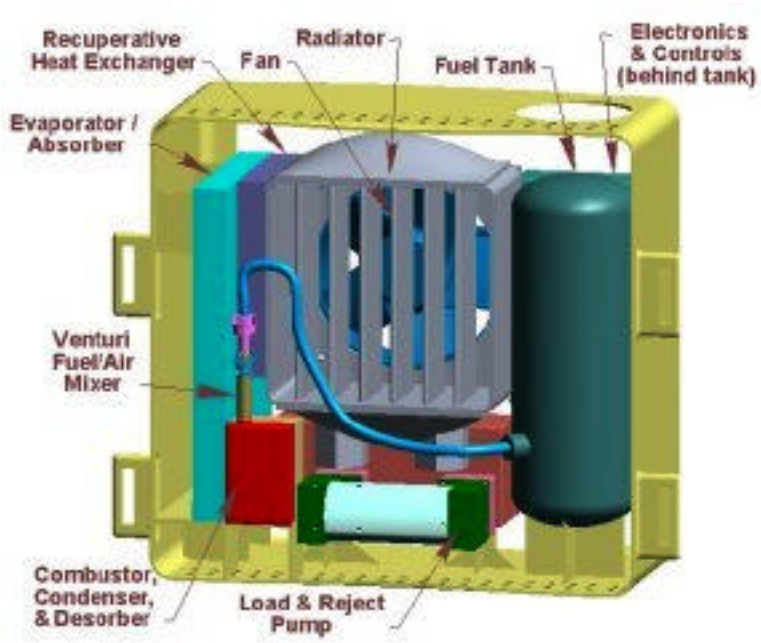

Figure 1. Manportable Cooler

cooling of buildings where the use of multiple small heat pumps eliminates the need for ducting and cycling of oversized HVAC equipment (which typically waste 50% of the cooling produced by a central cooling system), 3) lightweight air-transportable space conditioning, and 4) autonomous cooling for shipping containers.

Concept Description

Although the chemical compression and vapor compression cycles differ in the way compression is provided, both systems take the same approach to heat absorption and rejection. In both cycles, superheated refrigerant enters the condensing heat exchanger, where it undergoes constant-pressure heat rejection. The resulting condensate or mixture of condensate and vapor is then adiabatically expanded through either a throttling valve or a capillary. The mixture is then routed to an evaporating heat exchanger for constant-pressure heat absorption.

Compression is accomplished in the chemical heat pump system with a single-effect thermochemical compressor consisting of an absorber, a solution pump, a regenerative heat exchanger, and a desorber (gas generator), as illustrated in Figure 2. The cycle presented in Figure 2 is also described as an absorption heat pump.

A conventional absorption heat pump relies on gravity to form falling films, which provide liquid-to-gas contact in the absorber and desorber. This approach has two decisive disadvantages for manportable microclimate control applications. First, the heat pump must be oriented so that the solution will fall over heat exchanger tubes and form a thin film. Deviations from the proper orientation will prevent the heat pump from working. Second, falling films have a film thickness on the order of 1 mm. This becomes a significant barrier to mass diffusion and results in a physically large absorber and desorber. The miniature absorption heat pump avoids both disadvantages by relying on the high rates of heat and mass transfer available in microstructures.

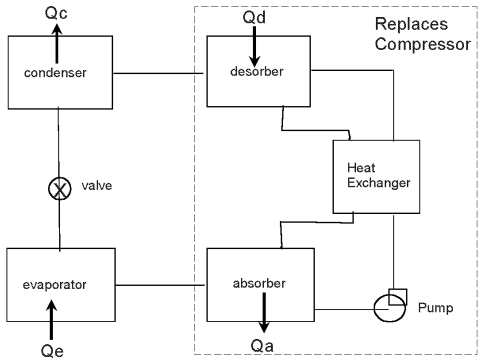

Figure 2. Single-Effect Absorption Chiller

The miniature chemical heat pump depends on the extraordinarily high heat and mass transfer rates available in microstructures to radically reduce its size while maintaining cooling capacity and efficiency. Its performance ultimately depends on a

microstructure with individual features as small as 5 microns. The heat pump is a miniature device, but it is large enough to use a small but conventional solution pump.

A number of chemical heat pump cycles have been evaluated. Cycles can be classified based on the fluid combination and on cycle arrangements. The most widely used fluid combinations are lithium bromide (LiBr) and water, where water is the refrigerant; and water and ammonia (NH_3), where ammonia is the refrigerant. Cycle arrangements range from the single-effect cycle described above to progressively more efficient but complicated multiple effects. Previous research at PNNL simulated three cycles, 1) single-effect LiBr/H_2O, double-effect LiBr/H_2O, and single-effect H_2O /NH_3.

The single-effect LiBr/H_2O cycle requires a low pressure solution pump with a 41 kPa (6 psi) pressure rise, but the cycle is inefficient compared to the double-effect cycle. While more efficient, the double-effect LiBr/H_2O cycle requires a higher pressure pump [410 kPa (60 psi) pressure rise] and is more complicated than the single-effect cycle. The pressure rise required for a H_2O/NH_3 solution pump (2400 kPa, 350 psi) is too high for currently available small pumps and results in a heavy and inefficient system. Based on this screening, both the single-effect and the double-effect LiBr/H_2O cycles are candidates for cooling applications where weight and size are key issues.

Heat Pump Components

An ongoing research project at PNNL is focused on developing a miniature LiBr/H_2O heat pump for manportable cooling applications. This research for developing a manportable cooler is funded by the Defense Advanced Research Projects Agency (DARPA). Each component of the manportable heat pump is described; Figure 3 shows typical examples.

- Absorber – LiBr and water solution enters the absorber and forms an ultra-thin absorbing film. The ultra-thin film is maintained by a proprietary micromachined structure. Refrigerant vapor passes through the micromachined structure and is

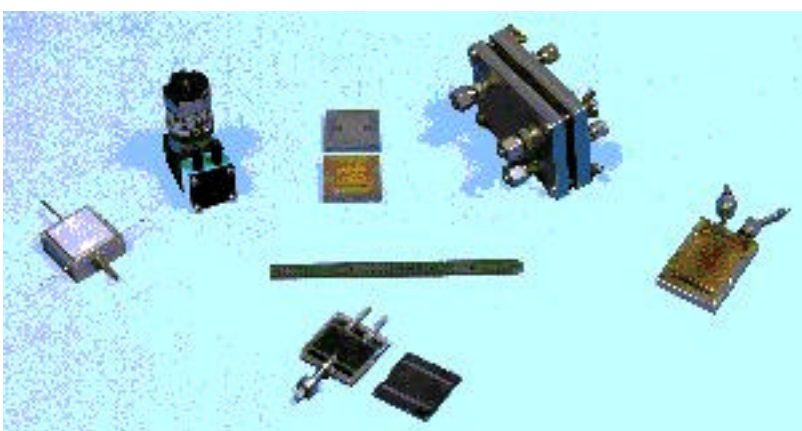

Figure 3. Absorption Heat Pump Components

absorbed into the weak solution. The absorption process results in a high rate of heat generation, which is subsequently removed from the solution by a

microchannel heat exchanger. Figure 4 presents an overview of the absorption process. The water vapor pressure, at the interface where the vapor and solution are in contact, is the driving force for the absorption process and must equal the partial pressure of water in the solution at the interface. As the solution passes through the absorber, water is diffused through the thin film. It is important to keep the pressure drop across the micromachined contactor low so that the maximum vapor pressure is available to drive the absorption process.

Absorber performance is strongly dependent on the thickness of the mechanically constrained, ultra-thin film. As Figure 5 shows, the reduction in the thickness of the thin film from 200 microns to 50 microns would reduce the length of the absorber by a factor of 16 while keeping the absorption rate constant. In addition, mechanically constrained absorption means that the absorber performance is independent of its physical orientation.

PNNL has developed and demonstrated the absorber, and preliminary results show that ammonia could be absorbed in water at a rate that generates between 10 and 30 W/cm^2. This is an extraordinary absorption rate, which exceeds the performance of conventional absorbers by more than a factor of 10. We are currently developing LiBr and water absorbers.

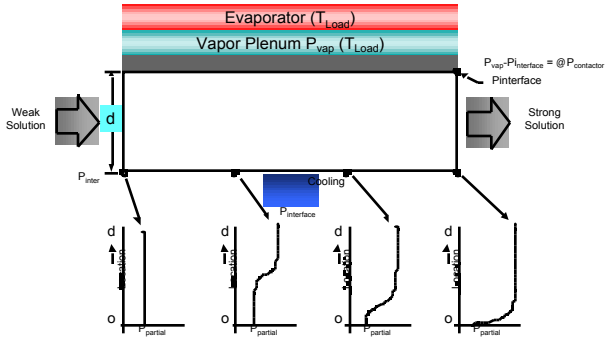

Figure 4. Ultra-Thin Film Absorption Process

- Evaporator - The evaporator also consists of an array of microchannels with channel widths between 100 and 300 microns and depths up to 1 mm. Extensive experimental investigations of microchannel evaporation have been published by PNNL [1]. Results show that convective heat transfer coefficients of 1.0 to 2.0 W/cm^2-K are readily attainable, and heat transfer rates up to 100 W/cm^2 can be obtained with a small temperature difference. These heat transfer coefficients and rates exceed those of conventional evaporators by a factor of 4.
- Desorber – Water and LiBr solution enters the desorber and forms an ultra-thin desorbing film. The ultra-thin film (with a film thickness of approximately 100 microns) is maintained by a micromachined contactor, which allows refrigerant vapor to evolve from the thin film. Thermal energy from a combustor can be used to heat the strong solution in the ultra-thin film, evaporating the refrigerant vapor

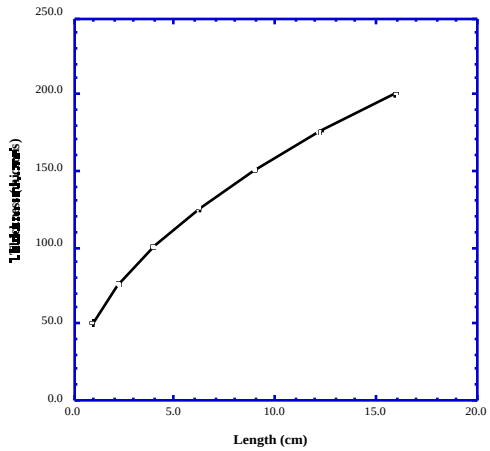

Figure 5. Impact of Film Thickness on Absorber Length

from the solution at a faster rate. The refrigerant vapor passes through the micromachined structure and is transferred to the condenser. PNNL has developed and demonstrated the desorber. Results show that water is desorbed from the strong solution at a rate of 0.2 g/cm^2/min. This exceeds the performance of conventional desorbers by a factor of 10.

- Condenser - The condenser consists of an array of microchannels with channel widths of 100 to 300 microns and depths up to 1 mm. The microchannel condenser has been demonstrated by PNNL. Heat transfer rates in excess of 30 W/cm^2 were attained with a small temperature difference and low pressure drop.
- Regenerative Heat Exchanger - The regenerative heat exchanger consists of arrays of microchannels with channel widths of 100 to 300 microns and depths up to 1 mm. PNNL has published extensive experimental investigations of single-phase microchannel heat transfer [2]. Convective heat transfer coefficients of 1.0 to 1.2 W/cm^2-K are attainable. These heat transfer coefficients exceed conventional regenerator performance by a factor of between 3 and 6.
- Combustor - PNNL has demonstrated a microchannel combustor for the DARPA. The microchannel combustor can produce thermal energy at a rate of at least 30 W_t/cm^2 with a thermal efficiency between 82 and 85% [3]. We plan to use the microscale combustor as the heat source for the miniature absorption heat pump.

Contactor Development

The desorber and absorber depend on the availability of micromachined contactors that will prevent liquids from passing though the contactor while having a minimum impact on the diffusion of water vapor. PNNL has evaluated a wide range of micromachined and other types of contactors. Data have been collected on breakthrough pressure (the pressure at which solution will pass through the contactor) and permeability (the mass transfer through the contactor as a function of pressure

difference across the contactor). Typical data are shown in Figure 6 (numbers refer to different contactor designs). Contactors in the upper right hand corner of Figure 6 are desirable contactors with high breakthough pressure and high permeability.

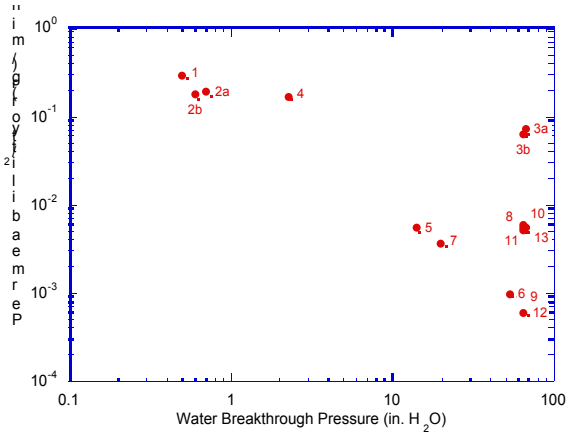

Figure 6. Permeability versus Supported Liquid Pressure

Heat Pump Performance

Based on experimental data we have collected to date, a prototype manportable cooler has been designed. This section presents the predicted performance of a single-effect, LiBr/H_2O heat pump sized to provide 350 W of cooling. The system includes a water-cooled condenser and absorber, a water heat source for the evaporator, and a microchannel combustor with exhaust gas at 250°C as the desorber heat source. In many applications, water cooling will be available (from the vehicle radiator for vehicle cooling and from a cooling tower for space conditioning). Other applications, such as manportable cooling, will require an air-cooled heat exchanger for ultimate heat rejection from the system.

Table 1 summarizes the weight and performance characteristics of two manportable coolers. The first system uses a battery to provide electric power for pumps and the fan, while the second uses a thermoelectric generator (TEG) installed between the combustor and the desorber to provide electric power. As Table 1 shows, the heat pump will weigh approximately 1000 g and have a coefficient-of-performance (COP) of 0.68. COP is the ratio of the amount of cooling provided divided by the thermal energy supplied to the desorber. For the manportable design, 1 W of heat provided by combusting fuel would provide 0.68 W of cooling. An electrically driven heat pump would have a COP of 2.8 if we assume that fuel must be consumed in a 25% efficient power generation system to provide compressor power. As shown in the table, a thermoelectric generator significantly reduces the weight of the system by eliminating the need for batteries.

Table 1. Miniature Chemical Heat Pump Characteristics

	NiCd Battery	PbTe TEG
Heat Pump	0.92	1.18
Radiator	0.85	0.83
Fan	0.65	0.65
Battery	1.07	0.03
TEG	0.00	0.18
Structure	0.47	0.47
Pumps/Fluids	0.43	0.43
Fuel/Tank	0.54	0.68
Electronics	0.22	0.22
Total, kg	**5.144**	**4.675**

These device characteristics are compelling examples of the advantage of devices in the miniature size range. The specific cooling (cooling per unit volume) of the miniature heat pump is higher than that of a conventional macroscopic absorption heat pump by a factor of 60 (1.25 W/cm^3 compared with 0.02 W/cm^3) for a macroscale device. The chemical heat pump also requires considerably less electric power than a vapor compression heat pump (20 W compared with 120 W). This will reduce the need for manportable power generation or batteries for powering microclimate control systems.

Conclusions

By taking advantage of the high rates of heat and mass transfer attainable in microstructures, PNNL is developing a miniature chemical heat pump with a cooling capacity of 350 W that weighs only 1 kg. This device achieves a reduction in volume of a factor of 60 over a macroscale absorption heat pump. A complete manportable cooling system, including the heat pump, an air-cooled heat exchanger, batteries, and fuel, is estimated to weigh between 4 and 5 kg, compared to the 10-kg weight of alternative systems.

References

1. Cuta JM, CE McDonald, and A Shekarriz. 1996. "Forced Convection Heat Transfer in Parallel Channel Array Microchannel Heat Exchangers." *Advances in Energy Efficiency, Heat/Mass Transfer Enhancement.* PID-Vol.2 HTD-Vol.338, American Society of Mechanical Engineers, New York.
2. Ravigururajan TS, J Cuta, C McDonald, and MK Drost. 1996. "Single Phase Flow Thermal Performance of a Parallel Micro-Channel Heat Exchanger." Presented at American Society of Mechanical Engineers 1996 National Heat Transfer Conference.
3. Drost MK, CJ Call, JM Cuta, and RS Wegeng. 1996. "Microchannel Integrated Evaporator/Combustor Thermal Processes." Presented and 2nd U.S Japan Seminar in Molecular and Microscale Transport Phenomena, August 8-10, Santa Barbara, California.