appendix 6:

Methodology for Technology Tracking and Assessment of Benefits

- Technology Tracking 162
- Methods of Estimating Benefits 162
- Deriving the ITP Net Benefit Curve ..... 162 – 163

Technology Tracking

For over 25 years, the Industrial Technologies Program (ITP), previously the Office of Industrial Technologies (OIT), has been tracking and recording information on technologies developed through cost-shared R&D projects with industry. The tracking process considers technologies that can be classified as commercially successful, mature, or emerging.

When full-scale commercial units of a technology are operational in private industry, that technology is considered commercially successful and is on the active tracking list. When a commercially successful technology unit has been in operation for approximately 10 years, that particular unit is then considered a mature or historical technology and is usually no longer actively tracked.

Emerging technologies are those in the late development or early commercialization stage of the technology life cycle (roughly within one to two years of commercialization). While preliminary information is collected on emerging technologies, they are not placed on the active tracking list until they are commercially available to industry.

The active tracking process involves collecting technical and market data on each commercially successful technology, including details on the:

- Number of units sold, installed, and operating in the United States and abroad (including size and location)
- Units decommissioned since the previous year
- Energy saved by the technology
- Environmental benefits from the technology
- Improvements in quality and productivity achieved through use of the technology
- Any other impacts of the technology, such as employment, effects on health and safety, etc.
- Marketing issues and barriers

Methods of Estimating Benefits

Information on technologies is gathered through direct contact with either vendors or end users of the technology. These contacts provide the data needed to calculate the unit energy savings associated with an individual technology, as well as the number of operating units.

Unit energy savings are unique to each individual technology. Technology manufacturers or end users usually provide unit energy savings, or at least enough data for a typical unit energy savings to be calculated. The total number of operating units is equal to the number of units installed minus the number of units decommissioned or classified as mature in a given year—information usually determined from sales data or end user input. Operating units and unit energy savings can then be used to calculate total annual energy savings for the technology.

The cumulative energy savings represents the accumulated energy saved for all units for the total time the technology has been in operation. This includes previous savings from now-mature units and decommissioned units, even though these units are not included in the current year's savings.

Once cumulative energy savings have been determined, long-term impacts on the environment are calculated by estimating the associated reduction of air pollutants. This calculation is straightforward, based on the type of fuel saved and the pollutants typically associated with combustion of that fuel. For example, for every million Btu of coal combusted, approximately 1.25 pounds of sulfur oxides (known acid raid precursors) are emitted to the atmosphere. Thus, every million-Btu reduction in coal use results in the elimination of 1.25 pounds of polluting sulfur oxides.

The results for annual and cumulative energy saving, as well as cumulative pollutant emission reductions for actively tracked technologies, are shown in Table 1 on pages 10 and 11.

Deriving the ITP Cost/Benefit Curve

If we take a different approach to estimating the net benefits of ITP energy savings, the following methodology can be used.

First estimate the Cumulative Production Cost Savings which provides an estimate of the gross benefit of the ITP (previously the OIT) program since its inception. Next we estimate the Cumulative Appropriations that were allocated by the government to support the development of these technologies that saved energy. Finally make adjustments to the gross energy savings to account for the cost to industry of adopting the new technologies. The method used to compute net economic benefits is based on the following sequence of steps:

- Cumulative energy savings — the accumulated energy savings (Btu) produced by ITP-supported technologies have been commercialized and tracked since the program began. As of 1997, this figure was 1662 trillion Btu and in 2002 it was 2557 trillion Btu.
- ITP appropriations — cumulative funding provided for ITP programs adjusted for inflation. As of FY 2002, this number was $2.15 billion in 2002 dollars.
- Cost of industrial energy saved — the average fuel price (dollars/Btu) that would have been paid to purchase energy multiplied by annual savings. Average industrial energy prices since 1980 are constructed based on inflation adjusted fuel prices. The nominal prices (in dollars per million Btu) are reported in the Energy Information Administration's Annual Energy Review; these are adjusted for inflation by the producer price index for number 2 fuel oil, natural gas, coal and electricity. These annual fuel prices are multiplied by the amount of energy saved per fuel type per year for each of the ITP commercialized and tracked technologies.

- Correct for Implementation Costs – Since we do not have reliable information about the incremental capital and operating and maintenance costs of these new technologies, an assumption must be made to adjust for these costs. The assumption we use is that industry demands at least a two-year payback period on all such investments, so we ignore the first two years of the cumulated energy savings for each of the technologies, arguing that these first two years savings are needed to recoup the life-cycle capital costs of adopting the new technology.

For each technology, the annual energy savings by fuel type is multiplied by the price of that fuel with price adjustments reflecting current costs of that fuel. The sum of all energy saved times the average energy price yields an estimate of the annual savings for all technologies in that particular year. In addition to technology energy savings, savings from the IAC and BestPractices Programs were also determined on an annual basis as described in Appendices 4 and 5, respectively. The net economic benefits are the accumulation of these savings over time with the net economic costs being ITP appropriations and the implementation costs reflected in the two-year payback period.

Just as there may be benefits not accounted for by this method – spinoffs, derivative technologies, etc. – there may be incremental costs not accounted for by this method. For example, there may be incremental capital costs associated with the use of a particular technology that are not currently captured in the tracking process, and thus are not included in the cost side of the equation.

The results of the application of this method are shown in the graph below.

Cumulative Production Cost Savings Minus Cumulative Program and Implementation Costs

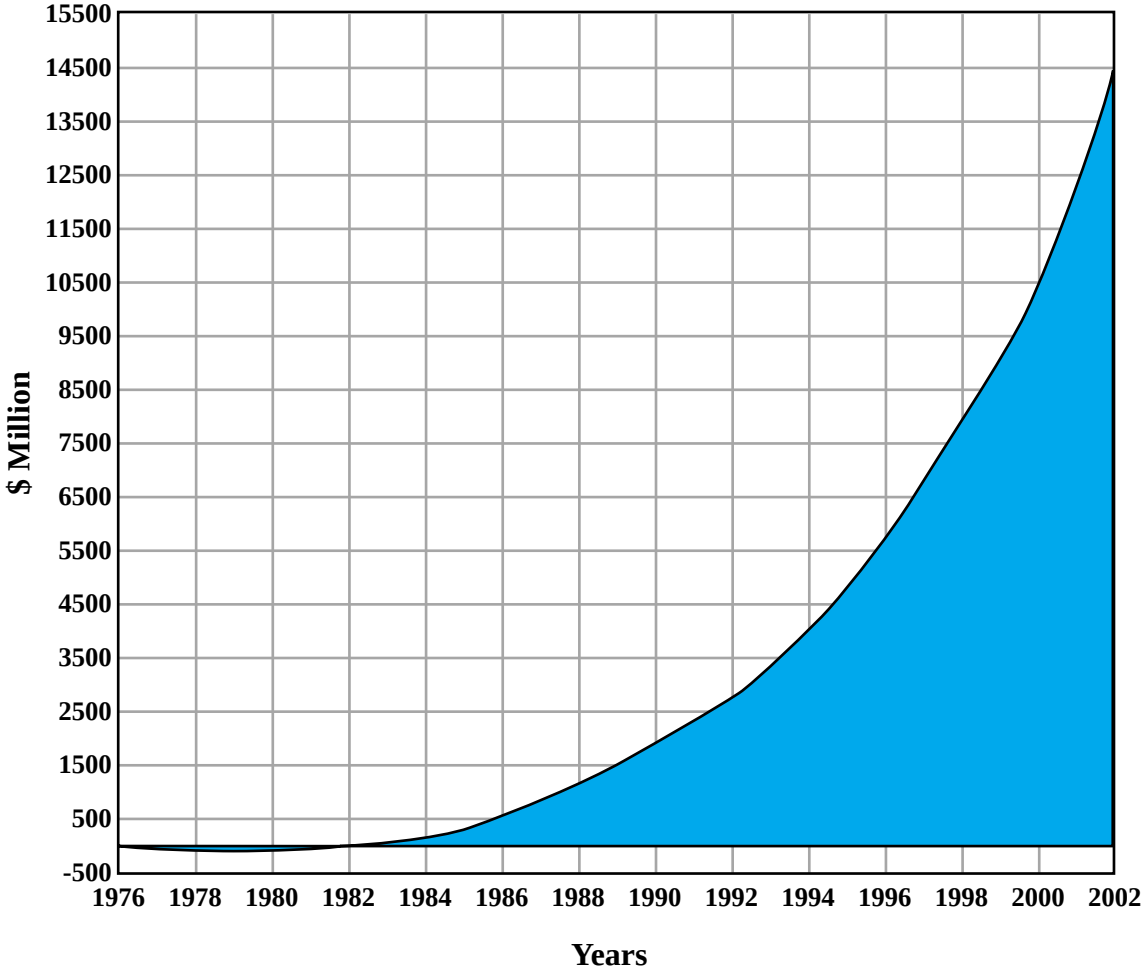

The cumulative Federal costs for the ITP Programs through fiscal year 2002 total $2.15 billion. Cumulative energy savings from completed and tracked ITP projects and programs add to approximately 3.65 quadrillion Btu in 2002, representing a net cumulative production cost savings of $14.5 billion. These production cost savings represent the net total value of all energy saved by technologies developed in ITP programs plus the energy cost savings from the IAC and BestPractices Programs, minus the cost to industry of using the technologies (estimated by assuming a two-year payback on investment) minus ITP Program costs. The graph shows that benefits substantially exceed costs.

Where to Go to Get More Information.

Visit our Web Site: **http://www.eere.energy.gov/industry**
Learn about all EERE Programs: **http://www.eere.energy**

Ask an Expert:

The Industrial Technologies Program's Clearinghouse is a great way to access ITP's resources.
Times available are 9 a.m. to 8 p.m. EST *(6 a.m. to 5 p.m. PST)*.
Phone 1-800-862-2086 Fax: 360-956-2214 Email: clearinghouse @ee.doe.gov

For Print Copies of EERE and ITP Publications, Contact:

Energy Efficiency and Renewable Energy Information Center
Phone: 1-877-377-3463 E mail: eereic@ee.doe.gov

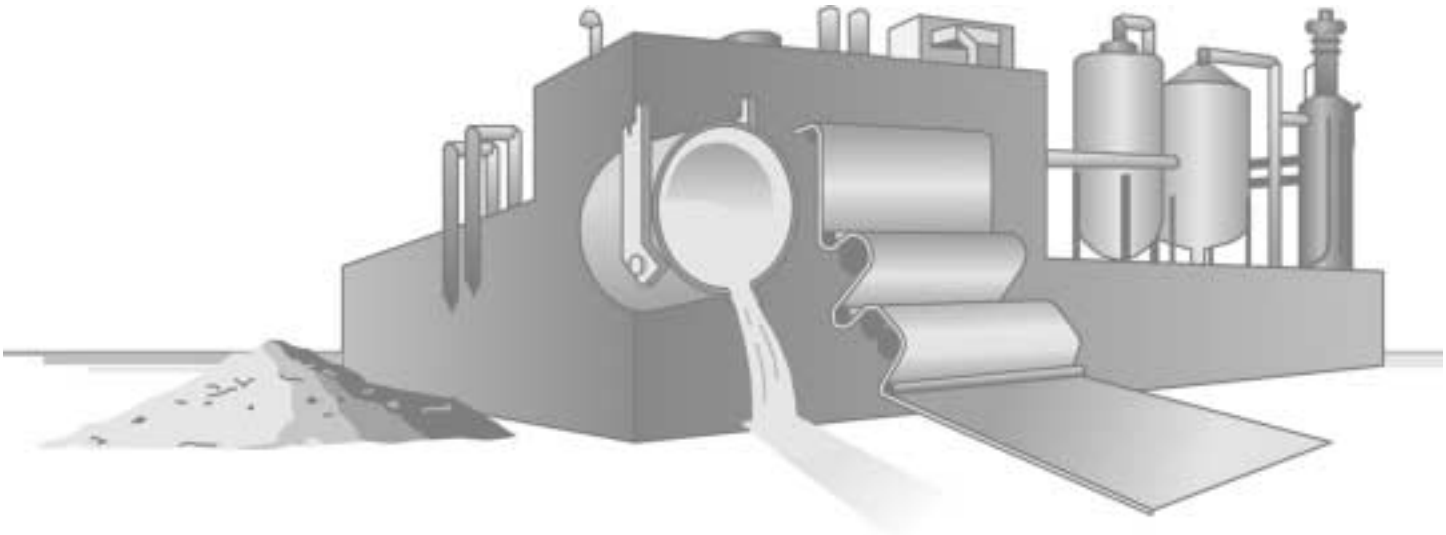

To order additional copies of this report, please call the ITP Clearinghouse at 1-800-862-2086.

U.S. Department of Energy
Energy Efficiency
and Renewable Energy

DOE Industrial Technologies Program

May 2004