High-Pressure Hydrogen Storage Systems

Presented by

Quantum Fuel Systems Technologies Worldwide, Inc.

Hydrogen and Fuel Cell Summit VIII

June 15-17, 2004

Making the Hydrogen Economy a Reality

- Automakers need
  - Hydrogen storage solution
  - Assurances that refueling infrastructure will be there
- Suppliers need
  - Production volume to reduce costs through economies of scale
  - Demand sufficient to justify capital expenditures
  - Consistent, performance-based codes and standards
- Consumers need
  - Vehicles that are transparent to own and operate
  - Convenient refueling and cost-competitive fuel

QUANTUM

Hydrogen Storage – It's More Than a Tank

Hydrogen storage systems on H_2 vehicles must:

- Contain
- Control
- Regulate
- Monitor
- Distribute
- Meter
- Refill
- Survive

QUANTUM

Integrated Fuel Storage Systems

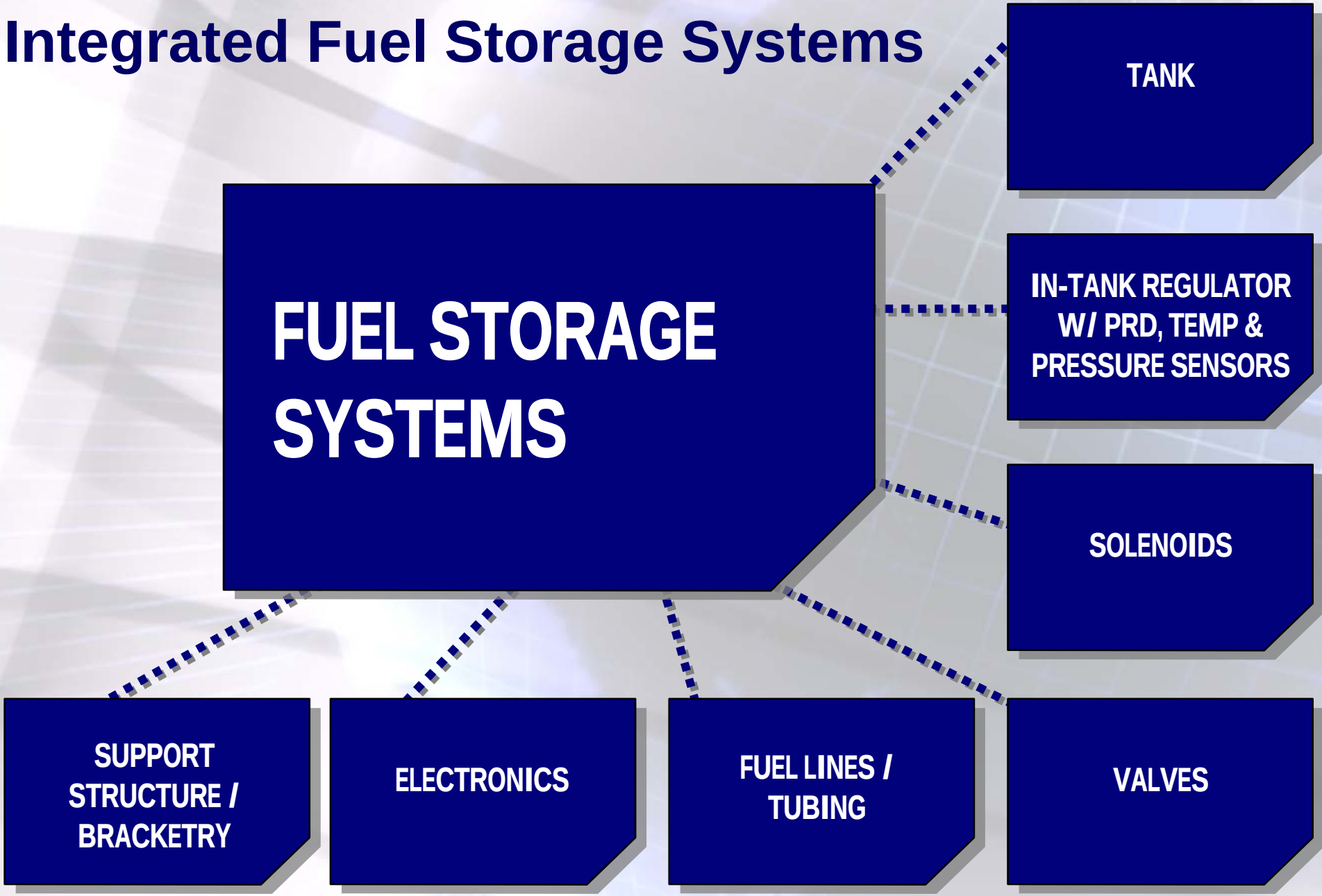

QUANTUM

OEM Production Level Integration

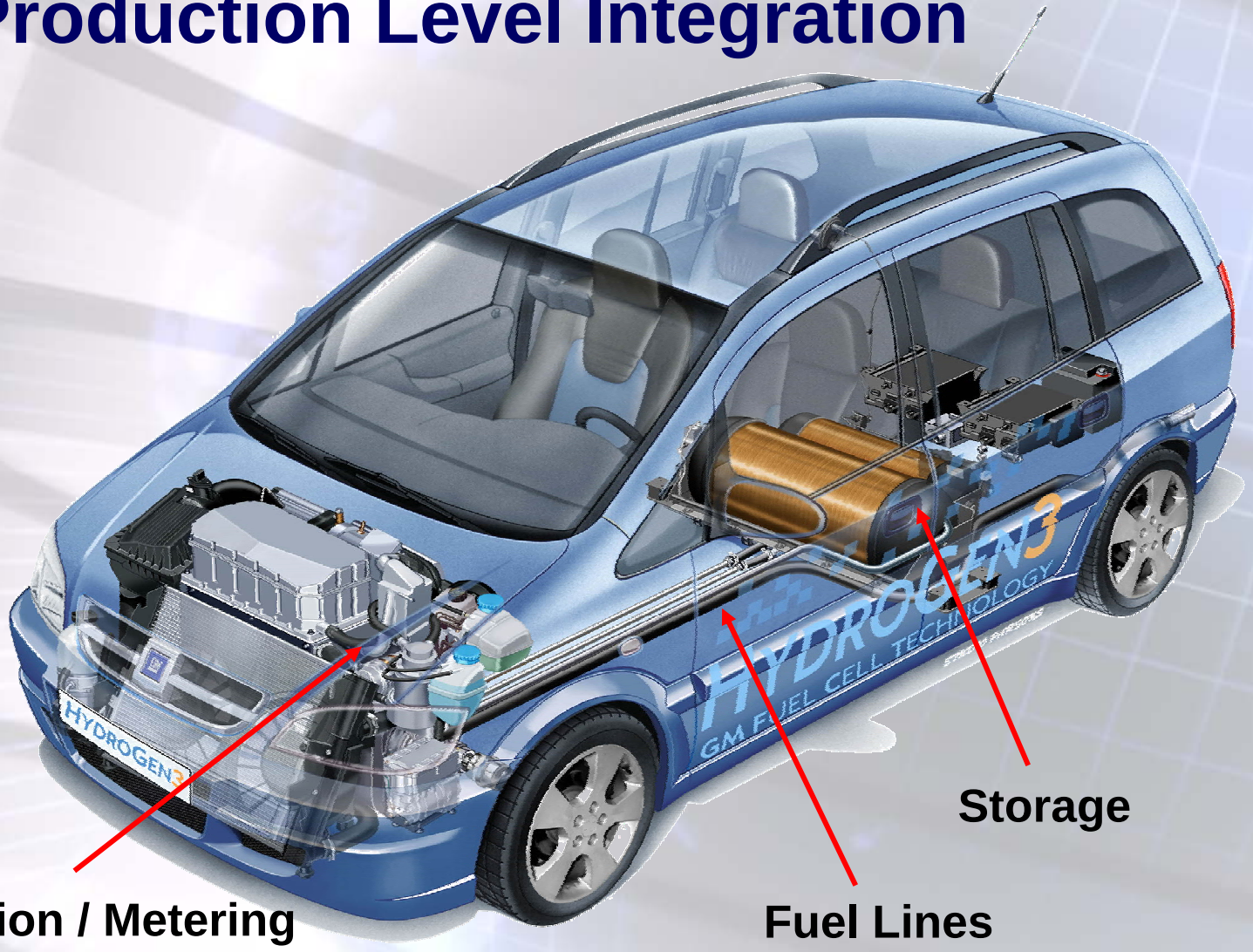

Storage

Injection / Metering

Fuel Lines

QUANTUM

Quantum TriShield™ Storage Tank

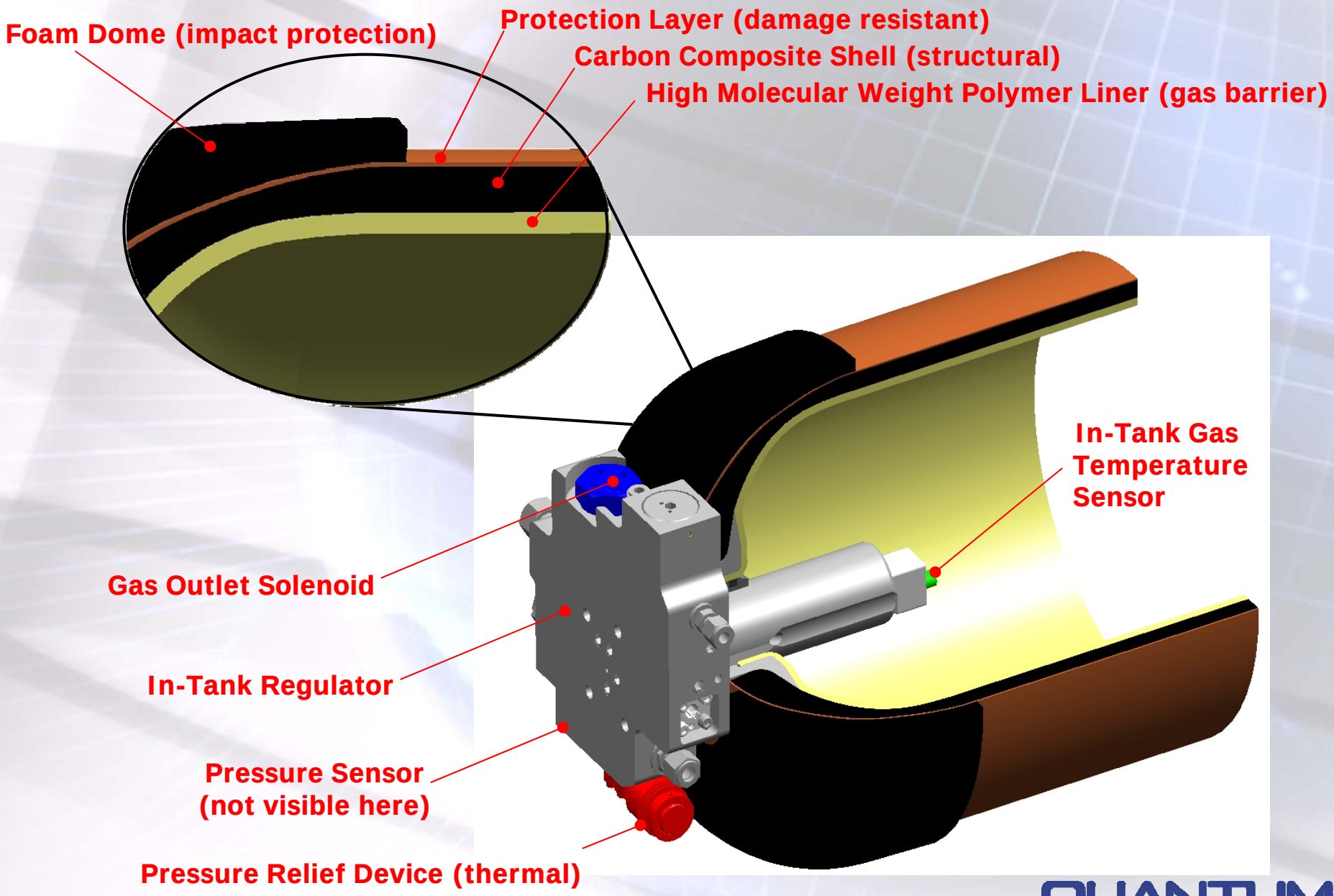

QUANTUM

Hydrogen Energy Density

350 bar vs. 700 bar Storage

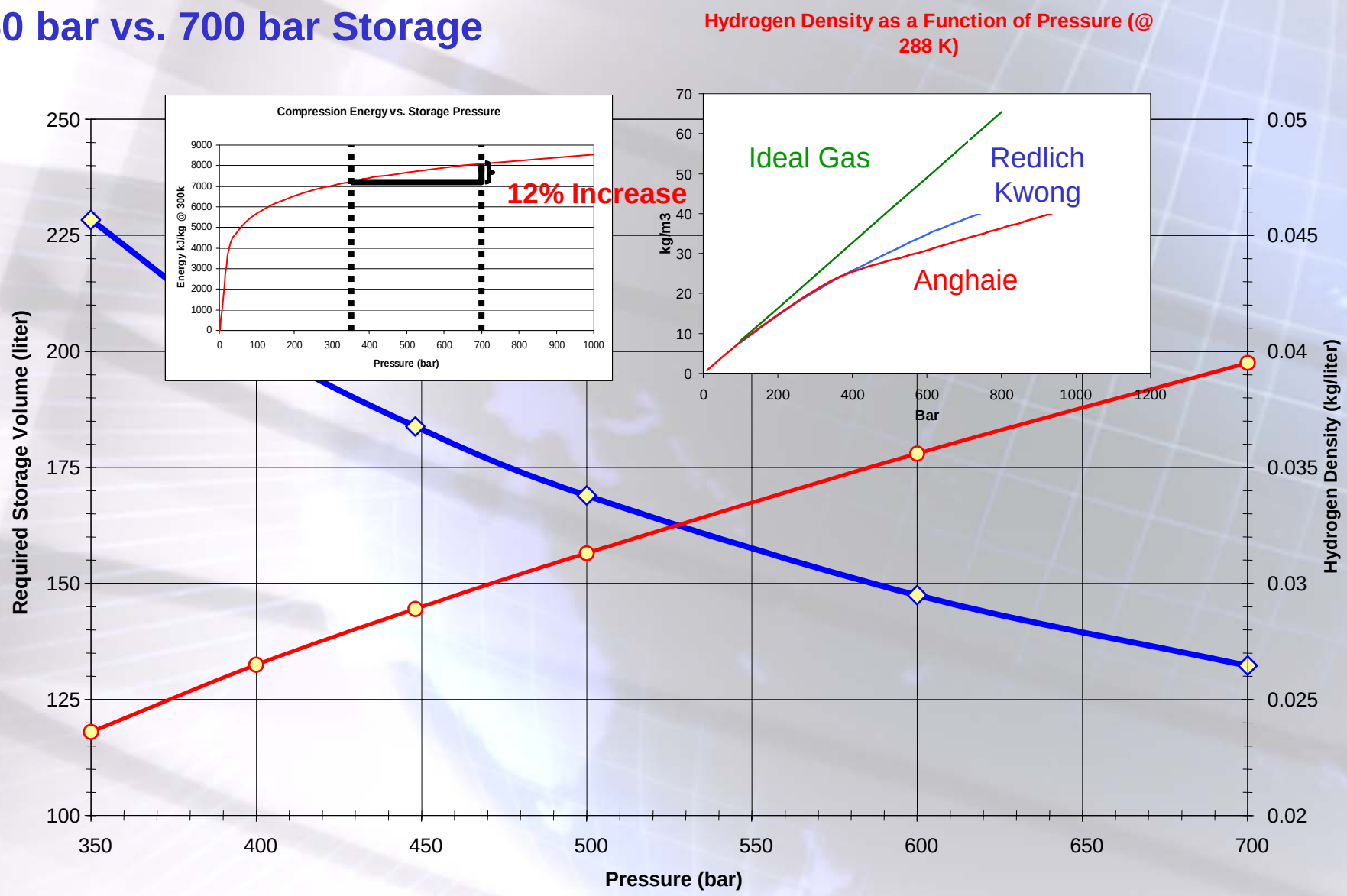

QUANTUM

Tank Validation

Storage Pressure	Standards Compliance
3,600 psi (25 MPa)	NGV2-2000 (modified) DOT FMVSS 304 (modified)
5,000 psi (35 MPa)	E.I.H.P. / German Pressure Vessel Code DBV P.18 NGV2-2000 (modified) FMVSS 304 (modified) KHK
10,000 psi (70 MPa)	E.I.H.P. / German Pressure Vessel Code DBV P.18 FMVSS 304 (modified)

Validation Tests

- Hydrostatic Burst
- Extreme Temperature Cycle
- Ambient Cycle
- Acid Environment
- Bonfire
- Gunfire Penetration
- Flaw Tolerance
- Accelerated Stress
- Drop Test
- Permeation
- Hydrogen Cycle
- Softening Temperature
- Tensile Properties
- Resin Shear
- Boss End Material

QUANTUM

In-Tank High Pressure Regulator

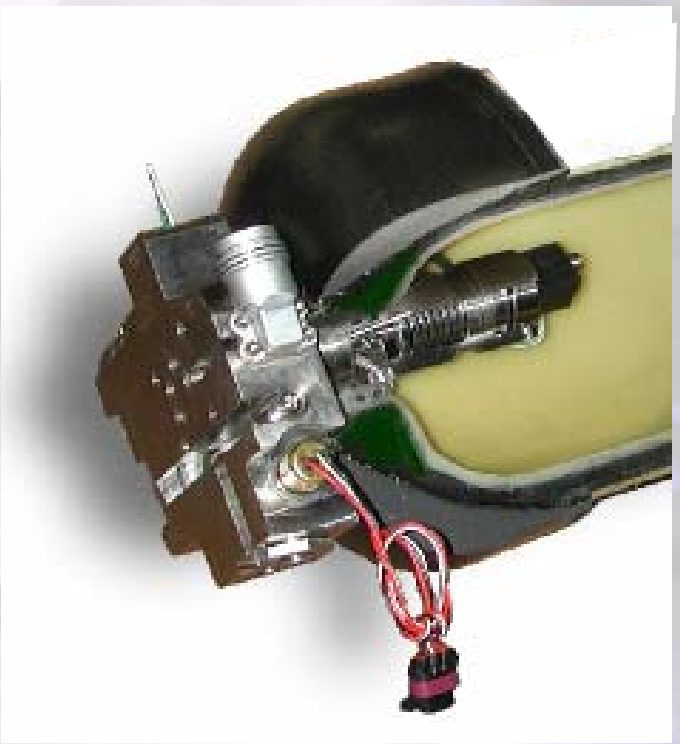

- Patented technology
- Natural Gas or H_2
- Eliminates need for high pressure fuel lines in the vehicle
- Multi-functional design simplifies integration

In-Tank Regulator Validation - Hydrogen

- 5000 psi: NGV3.1, EIHP, KHK Japanese High Pressure Vessel Code
- 10,000 psi: TÜV German Pressure Vessel Code

QUANTUM

In-Tank Regulator Features

- 1 or 2 stages of pressure regulation
- Thermally activated pressure relief device (PRD) (non-resetting)
- Pressure activated PRD (self-resetting)
- Electrically controlled shut-off valve
- Manual pressure shut-off valve
- Pressure sensor
- Internal temperature sensor
- Inlet check valve
- Excess flow valve
- High pressure inlet fill fitting
- Regulated pressure outlet fitting
- Captured relief vent port

Parameter	Nominal Performance
Minimum inlet pressue	20 bar
Maximum inlet pressure	856 bar at 85° C
Nominal outlet pressure	10.2 bar
Nominal hydrogen flowrate	1.63 g/sec
Proof pressure	1027 bar
Burst pressure	1517 bar
Low pressure relief	15.9+1.4/-0.7 bar
Cracking pressure droop	0.55 bar
Dynamic pressure droop	0.0017 bar/slpm
Operating temperature	-40° C to + 85° C
Hydrogen response rate	up to 1 g/sec in <0.5 sec
Shut-off response time	<30 ms

QUANTUM

Application Examples

QUANTUM

Hyundai Santa Fe

- 5,000 psi (35 MPa) H_2 storage system

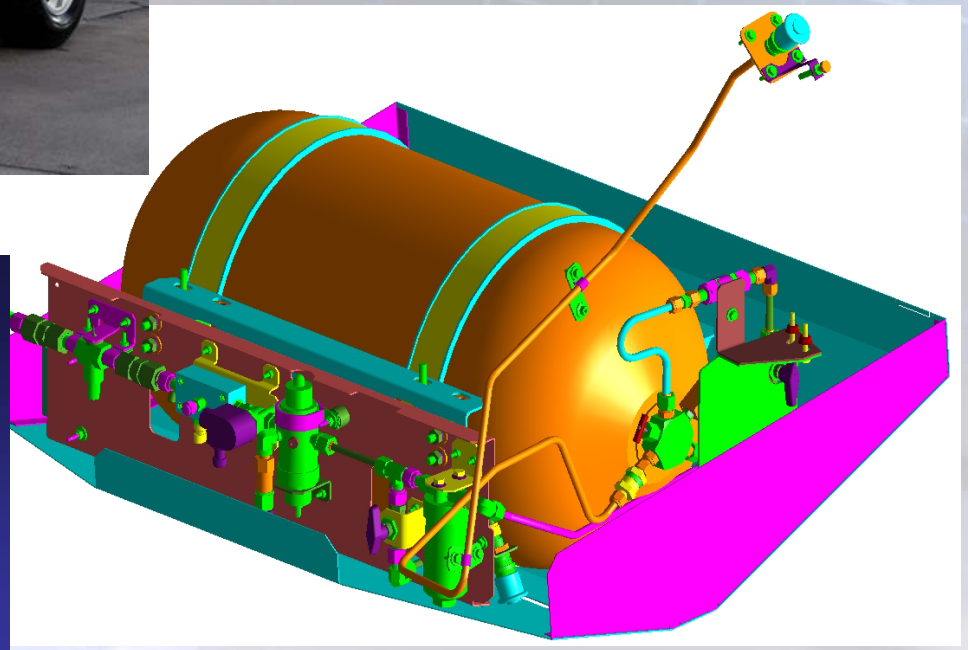

Scope of Work:

Components & Subsystems

- All-composite Hydrogen Fuel Tank
- Pressure Regulation
- Fuel Lines and Fittings
- Wire Harness

System Packaging & Integration

QUANTUM

GM HydroGen3 “Compressed 700”

Scope of Work:

Components & Subsystems

- All-composite Hydrogen Fuel Tank
- Pressure Regulation
- Fuel Lines and Fittings
- Wire Harness

System Packaging & Integration

QUANTUM

Hydrogen Fuel Storage System

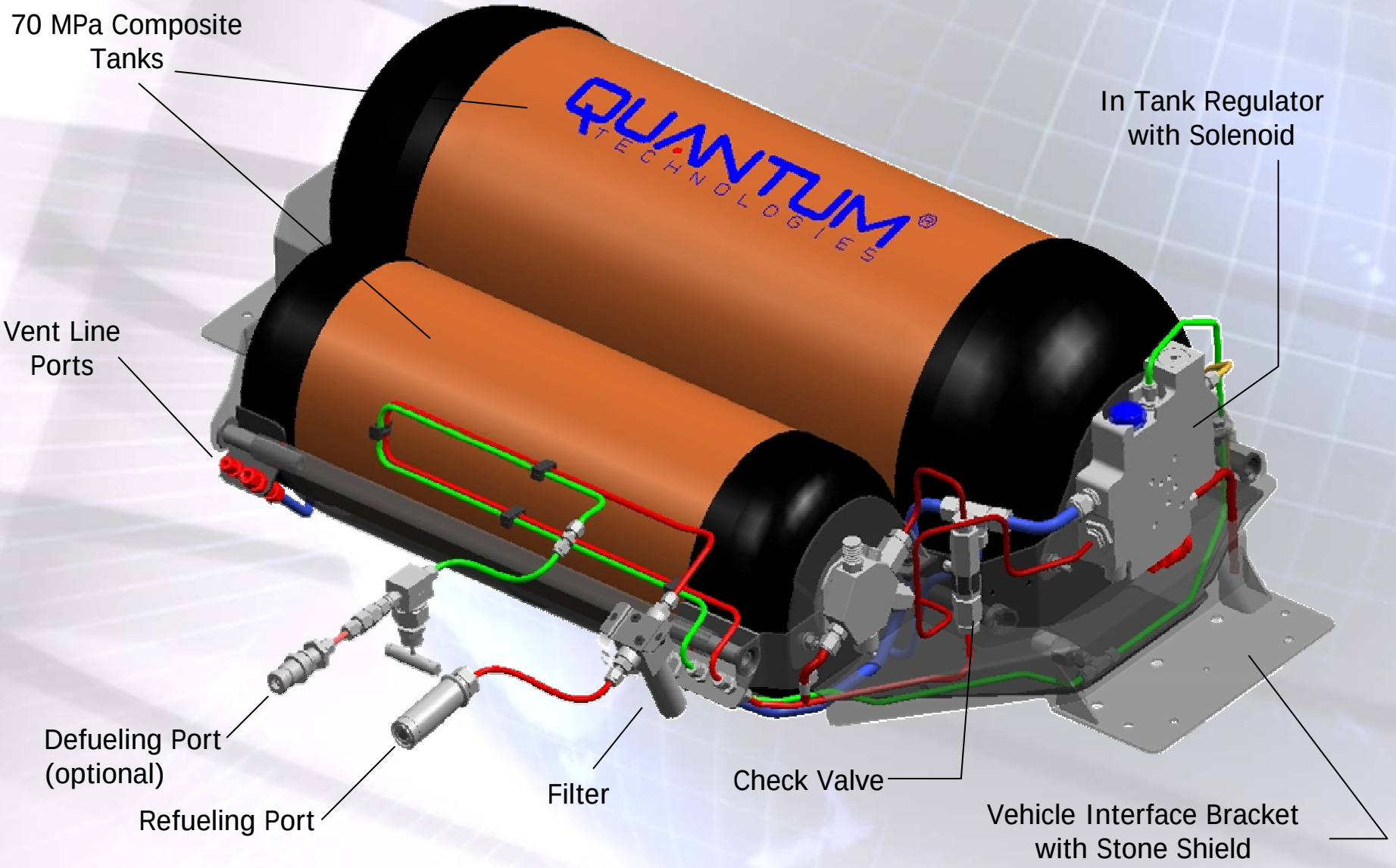

QUANTUM

GM HydroGen3 “Compressed 700”

10,000-psi (70 MPa) Hydrogen Fuel Storage System

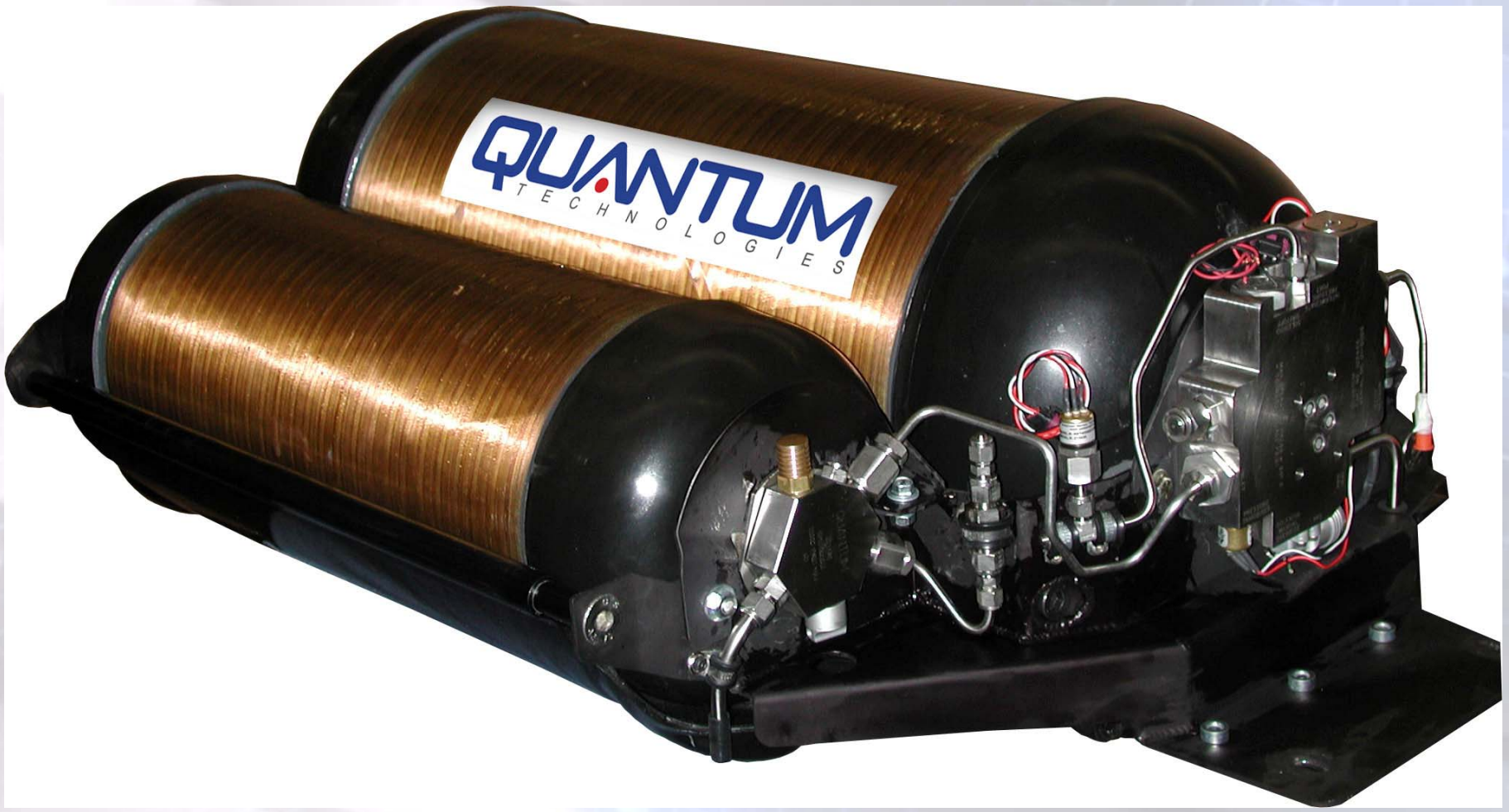

QUANTUM

GM Hy-wire

5,000-psi (35 MPa) Hydrogen Fuel Storage System

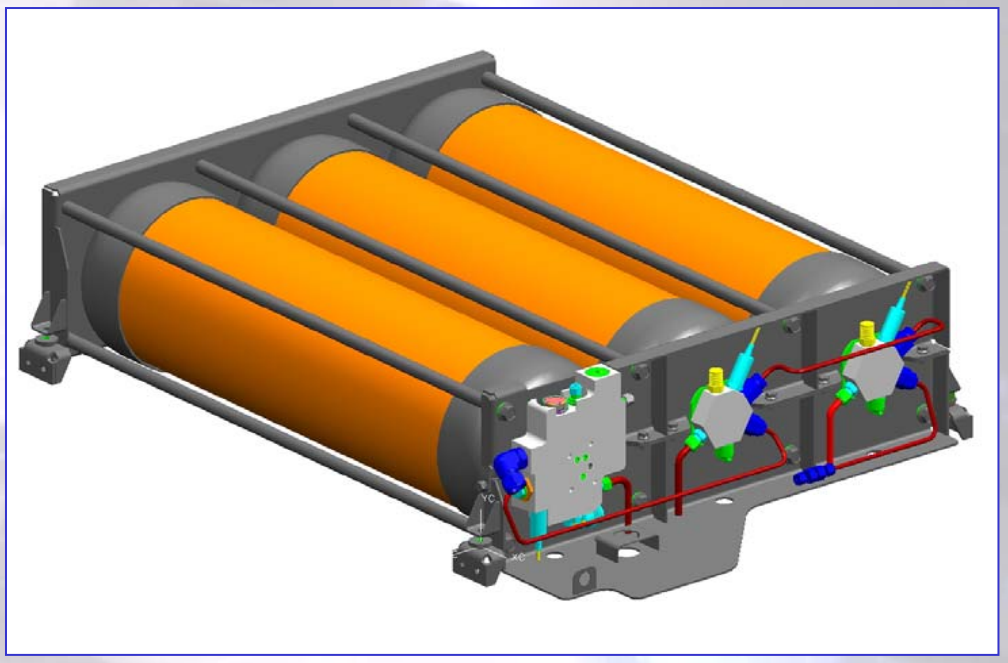

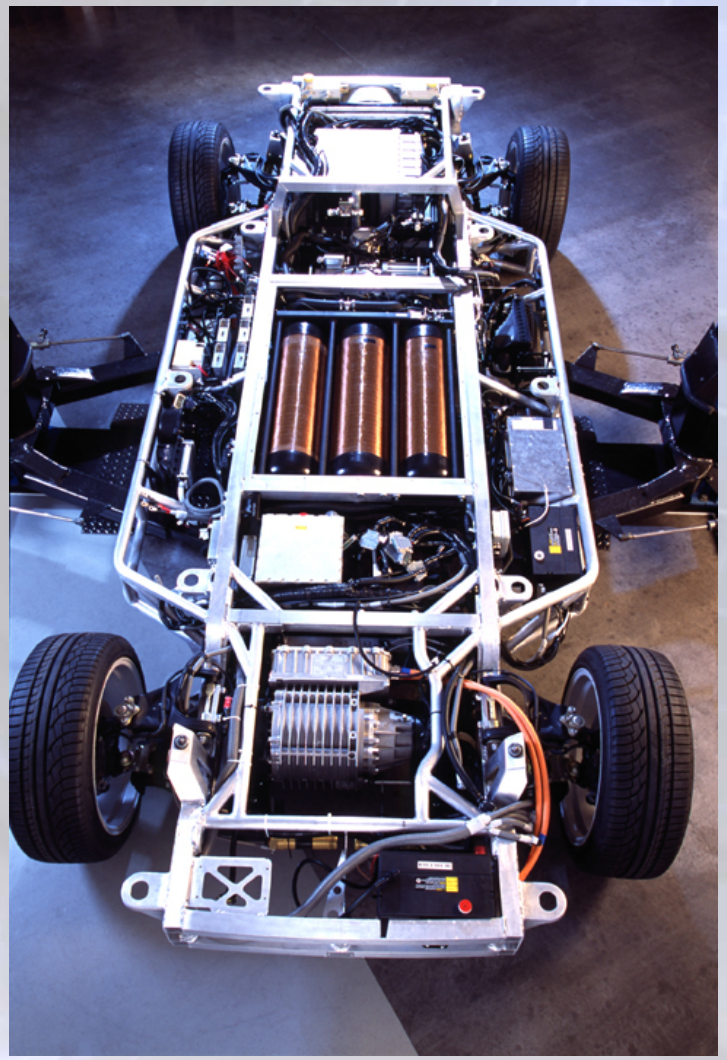

QUANTUM

Compressed Hydrogen Storage Safety

QUANTUM

Compressed Gases are All Around Us

Applications	Service Pressures (psi)
Industrial gas	6,000
Fireman's breathing tank	4,500
Paintball propellant	4,500
Natural gas vehicle storage	3,600
Scuba tanks	3,300
Medical	3,000
Aircraft oxygen and emergency slides	3,000
Beverage	1,800
Nitrous Oxide (automotive)	1,200
Fire extinguishers	240

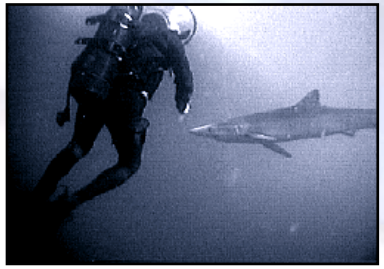

QUANTUM

Validation Matrix by Codes and Standards

Tank Validation Test Plan	EIHP R.12		NGV2-2000		KHK - Betten 9		DOT FMVSS 304	
	Qty	Remarks	Qty	Remarks	Qty	Remarks	Qty	Remarks
VALIDATION TESTS								
Leak-Before-Break Perf.	1	B11: 15,000 cycles @ 1.5 X 700 bar, (not applicable is B10 reached 45,000 cycles)	0	Not required	0	Not required	0	Not required
Extreme Temp Cycle	1	B17: 7500 cycles @ 1.25 X 700 bar @ 85C & -40C, He Leak test and burst	0	4000 cycles @ 1.25 X 700 bar @ 85C & 4000 cycles @ 0.8 X 700 bar @ -40C	0	Not required	0	Not required
Burst	0	B9: 2.35 X 700 bar	0	Below/ same as EIHP requirements	3	Burst Pressure per greater of (analysis vs. 2.35 X 700 bar)	0	Below/ same as EIHP requirements
Ambient Temp. Cycle	0	B10: 15000 cycles @1.25 X 700 bar	2	45,000 cycles @1.25 X 700 Bar	0	Below/ same as EIHP requirements	0	Below/ same as EIHP requirements
Leak	1	B19: He @ 700 bar	0	Below/ same as EIHP requirements	0	??????	0	Not required
Bonfire	0	B12: @ 700 bar - Below FMVSS requirements	0	Below FMVSS requirements	0	Below FMVSS requirements	2	with H2: 1 tank @ 700 bar and 1 @ 0.25 X 700 bar
Penetration	1	B13: @ 700 bar	0	Below/ same as EIHP requirements	0	Not required	0	Not required
Chemical Exposure	1	B14: Chemical exposure & 5000 cycles @ 1.25 X 700 bar & burst	0	Below/ same as EIHP requirements	0	Not required	0	Not required
Composite Flaw Tolerance	1	B15: 15000 cycles @ 1.25 X 700 bar	0	Below/ same as EIHP requirements	0	Not required	0	Not required
Accel. Stress Rupture	1	B16: 1000 hours @ 85C & 1.25 X 700 bar, Burst @ 0.85 X 2.35 X 700 bar	0	Below/ same as EIHP requirements	0	Below/ same as EIHP requirements	0	Not required
Drop/Cycle Test	1	B18: 4 drops & 15000 cycles @ 1.25 X 700 bar	0	Below/ same as EIHP requirements	0	Perform 5 drops	0	Not required
Permeation	1	B20: 500 hours H2 @ 700 bar	1	Perform per EIHP + twice the torque on the boss/adapter	0	Below/ same as EIHP + NGV2 requirements	0	Not required
Tensile Property of Plastic	yes	B1: Plastic liner tested @ -40 per ISO 527-2	no	Plastic liner tested @ -50 per ASTM D638	yes	Test on 15 liners each design ??????	0	Not required
Softening Temp.of Plastic	yes	B2: Plastic liner tested at 100C per ISO 306	no	Below/ same as EIHP requirements	0	Not required	0	Not required
Glass Transition	yes	B3: Resin tested per ASTM D3418	no	Not required	0	Not required	0	Not required
Boss Torque	1	B21: twice torque specified by QT, He Leak, Burst	0	Not required	0	Not required	0	Not required
Resin Shear Strength	yes	B4: Boil 3 samples for 24 hours and test per ASTM D2344	no	Below/ same as EIHP requirements	yes	Boil 5 samples for 24 hours and test per ASTM D2344	0	Not required
Hydrogen Gas Cycle	1	B22: 1000 cycles @ 700 bar	0	Below/ same as EIHP requirements	0	Below/ same as EIHP requirements	0	Not required
Sulfide Stress Cracking Resistance for Steel	no	Not required	no	Boss test per Method A of NACE Standard Tensile Test Standard TM0177-96	0	Not applicable for Type IV	0	Not required
Minimum Thickness Design Qualification	0	Not required	0	Not required	1	Verify minimum thickness after ambient cycle test is performed (cut the tank)	0	Not required
Environment Cycle	0	Not required	0	Not required	1	Different procedure than EIHP and NGV2	0	Not required
Total test tanks required	11		3		5		2	
Spare tanks			2					

Total test tanks required 23

QUANTUM

Validation Testing

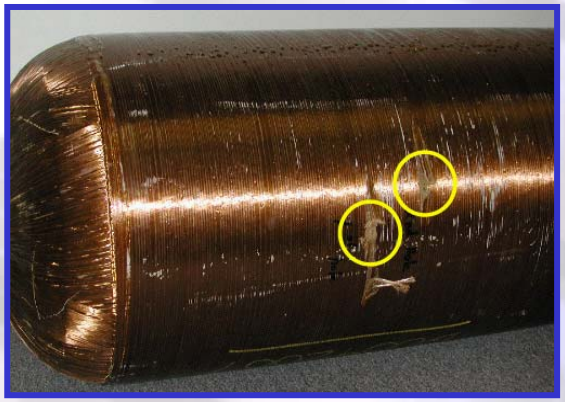

Gunfire Testing

Environmental Testing

Hydrogen Cycling

Burst Testing

Bonfire Testing

QUANTUM

Severe Abuse Testing

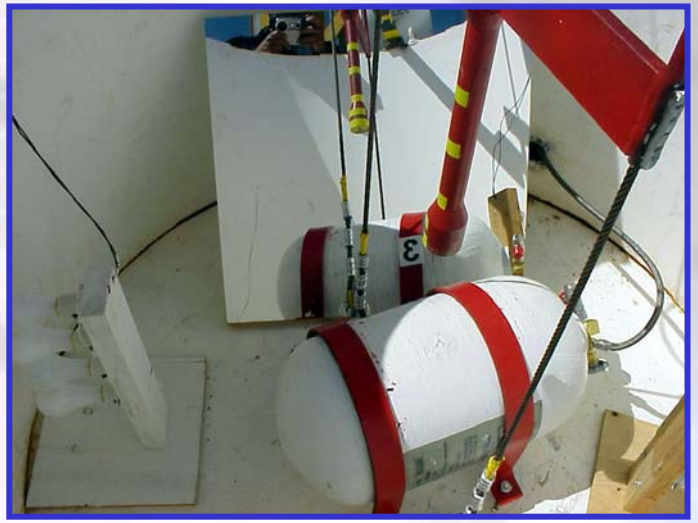

QUANTUM

Hydrogen vs. Gasoline

From: M. Swain

QUANTUM

Hydrogen Safety

- Current designs are based on decades of industrial experience with compressed gases and hydrogen
- Government and industry groups are developing standards

Performance-Based Safety Standards Will Ensure Safe Hydrogen Storage and Handling

QUANTUM

Thank you.

Visit our website: www.qtww.com