C Level 1 Heading

THIS PAGE CONTAINS A LEVEL 1 HEADING WHICH ACTIVATES THE APPENDIX LETTER IN THE PAGE NUMBER. THE HEADING 1 STYLE MUST BE MODIFIED IN ORDER TO CHANGE THE APPENDIX LETTER.

PLEASE RECYCLE THIS PAGE.

Appendix C

Biokinetic Models

Appendix C

Biokinetic Models

Biokinetic models are used to describe the initial deposition, and subsequent movement and retention of material throughout the body. The Hanford Internal Dosimetry Program (HIDP) seeks to use realistic and generally accepted, peer-reviewed biokinetic models to the extent practicable. The specific models used for various elements are detailed in the various chapters of this manual. General models applicable to any element include the respiratory tract and gastrointestinal (GI) tract models, which are described in this appendix.

C.1 ICRP Respiratory Tract Model

The HIDP uses the International Commission on Radiological Protection (ICRP) publication 30 (1979) Respiratory Tract Model shown in Figure C.1. The deposition fractions, D_{N-P}, D_{T-B}, and D_P, as given in Figure C.1, apply to an aerosol with an activity median aerodynamic diameter (AMAD) of 1 µm. Figure C.2, also from ICRP 30, shows how the deposition fractions vary as a function of AMAD. Deposition fractions for particle sizes other than 1 µm may be estimated from Figure C.2, may be obtained from Table C.1, or may be determined using the CINDY computer code. From Figure C.2, it is evident that D_{N-P} and D_P change with particle size, whereas D_{T-B} is essentially constant at 0.08 over the respirable particle size range.

Other respiratory tract models of interest include the ICRP 66 human respiratory tract model (ICRP 1994) and the National Council on Radiation Protection and Measurements Report No. 125 model (NCRP 1997). Although the ICRP 66 model has received considerable international acceptance for both technical and regulatory applications, the HIDP has not sufficiently evaluated the tool for implementation.

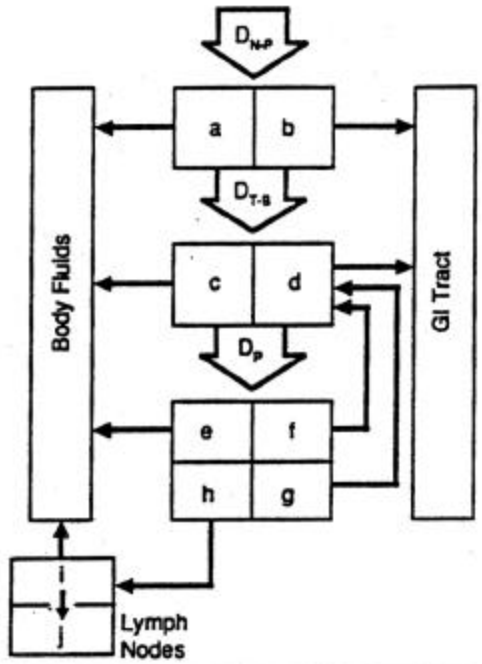

Region	Compartment	Class					
		D		W		Y	
		T Days	F	T Days	F	T Days	F
N-P (D_{N-P} = 0.30)	a	0.01	0.5	0.01	0.1	0.01	0.01
	b	0.01	0.5	0.40	0.9	0.40	0.99
T-B (D_{T-B} = 0.08)	c	0.01	0.95	0.01	0.5	0.01	0.01
	d	0.2	0.05	0.2	0.5	0.2	0.99
P (D_P = 0.25)	e	0.5	0.8	50	0.15	500	0.05
	f	n.a.	n.a.	1.0	0.4	1.0	0.4
	g	n.a.	n.a.	50	0.4	500	0.4
	h	0.5	0.2	50	0.05	500	0.15
L	i	0.5	1.0	50	1.0	1000	0.9
	j	-	0.0	-	0.0	-	0.1

R8812094 23 51

Figure C.1. Mathematical Model Used to Describe Clearance from the Respiratory System (The values for the removal half-times, T_{a-j} and compartmental fractions, F_{a-j}, are given in the tabular portion of the figure for each of the three classes of retained materials. The values given for D_{N-P}, D_{T-B}, and D_P [left column] are the regional depositions for an aerosol with an AMAD of 1 µm. The schematic drawing identifies the various clearance pathways from compartments a-j in the four respiratory regions, nasal passages [N-P], tracheal-bronchial tree [T-B], pulmonary [P], and lymph nodes [L].)

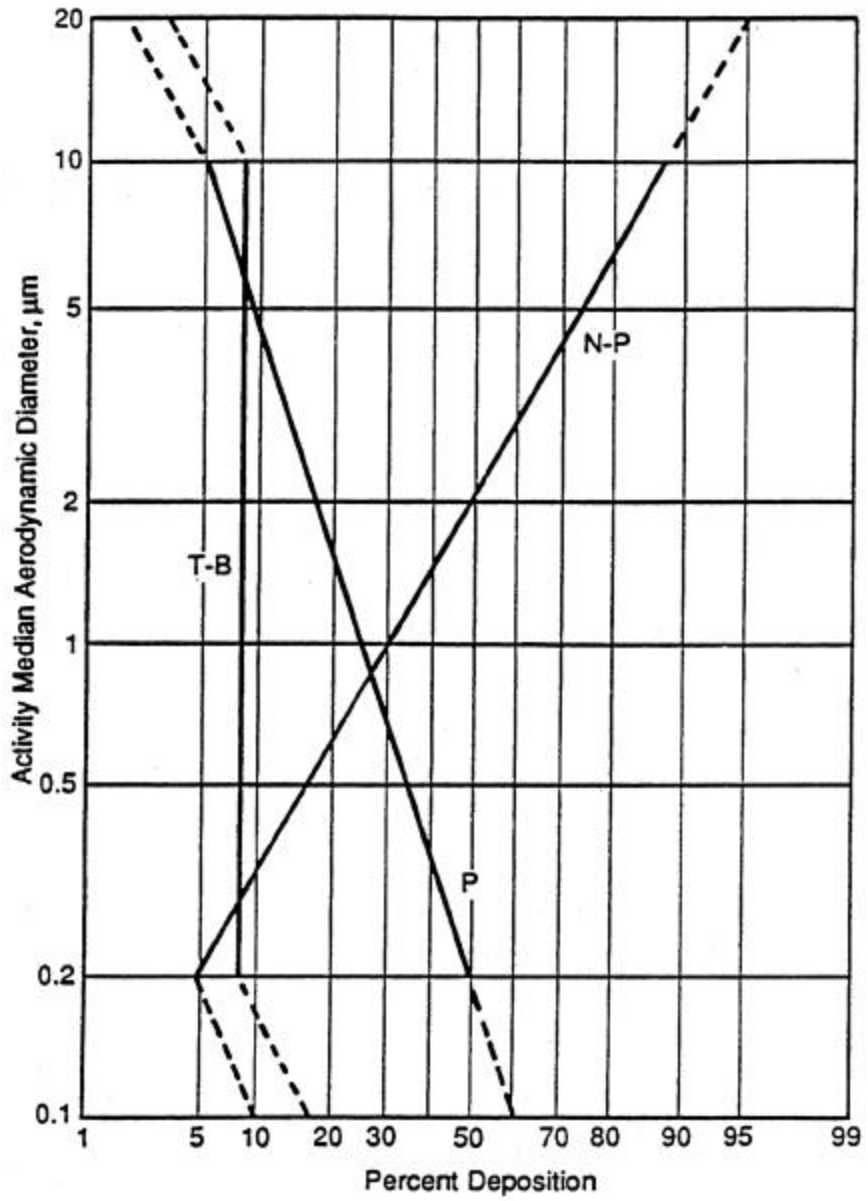

Figure C.2. Deposition of Dust in the Respiratory System (The percentage of activity or mass of an aerosol that is deposited in the N-P, T-B, and P regions is given in relation to the AMAD. The model is intended for use with aerosol distributions with AMADs between 0.2 and 10 µm and with geometric standard deviations of less then 4.5. Provisional estimates of deposition further extending the size range are given by the dashed lines. For an unusual distribution with an AMAD of greater than 20 µm, complete deposition in the N-P region can be assumed. The model does not apply to aerosols with AMADs of less than 0.1 µm.)

Table C.1. Deposition Fractions as a Function of Aerosol AMAD[a]

AMAD, mm	Deposition Fractions	
	N-P[b]	P[c]
0.2	0.050	0.50
0.3	0.088	0.43
0.4	0.13	0.38
0.5	0.16	0.34
0.6	0.19	0.32
0.7	0.23	0.30
0.9	0.26	0.28
1.0	0.30	0.25
2.0	0.50	0.17
3.0	0.61	0.13
4.0	0.69	0.10
5.0	0.74	0.088
6.0	0.78	0.076
7.0	0.81	0.067
8.0	0.84	0.060
9.0	0.86	0.055
10.0	0.87	0.050

(a) From NUREG/CR-1962, p. 25 (Eckerman, Watson, and Ford 1981). The deposition fraction for the T-B region is 0.08, independent of AMAD.
(b) N-P = nasal-passage region.
(c) P = pulmonary region.

C.2 The Gastrointestinal Tract Model

The HIDP uses the ICRP 30 (1979) GI Tract Model shown in Figure C.3. The model is integral to the CINDY computer code. The fraction of material passing through the GI tract that is absorbed into the blood is defined as the f_1 factor and specific values are reported in the various radioelement chapters of this manual. This model assumes that uptake to blood within the GI tract only occurs from the small intestine (SI). An absorption rate to the blood from the GI tract can be calculated as follows:

$$\lambda_B = \frac{f_1 \lambda_{SI}}{1 - f_1} \qquad \text{(C.1)}$$

where λ_{SI} is assumed to be 6 d^{-1}.

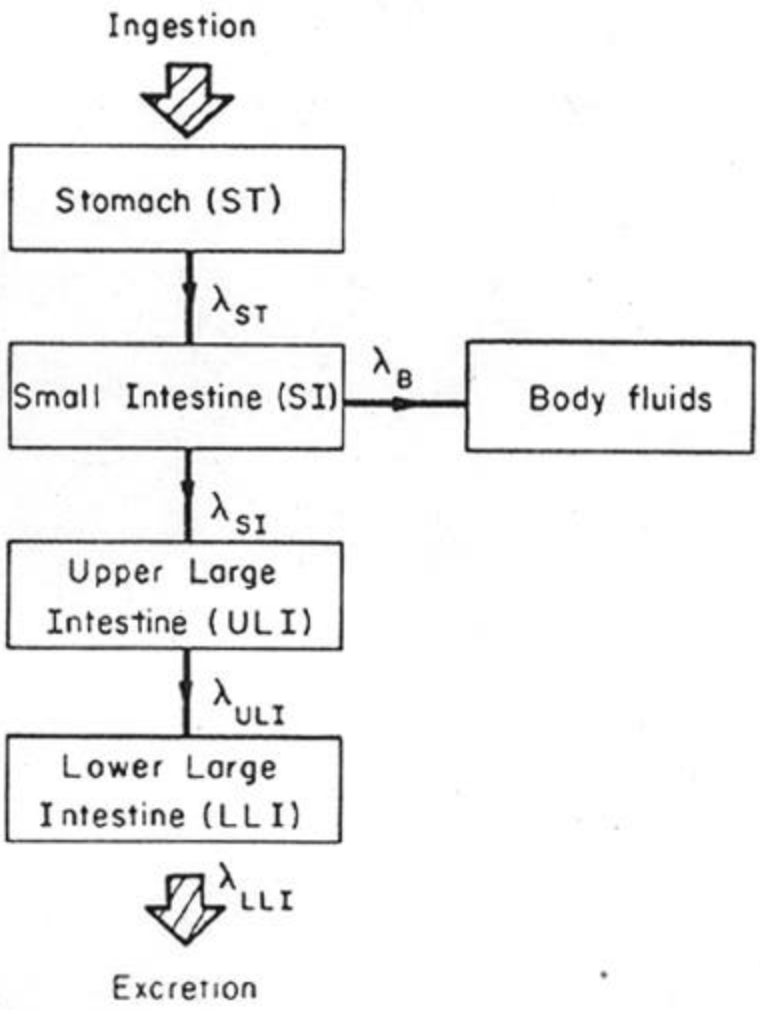

Figure C.3. Biokinetic Model for the Gastrointestinal Tract (From ICRP 30 [1979])

C.3 Fecal Sampling Model

Fecal sampling can be a valuable aid for estimating the magnitude of an inhalation intake. Through application of the lung and GI tract models (ICRP 1979), estimates can be made of the expected daily fecal excretion following an inhalation intake. For class W and class Y radionuclides, the expected fecal excretion can be divided into two components: that which represents rapid clearance from the respiratory tract and that which represents longer-term clearance from the pulmonary region of the lung. Measurement of the quantity of a class W or Y radionuclide excreted via feces in the rapid clearance phase (first few days following an intake) can provide an early estimate of intake that is often more sensitive than other

bioassay measurements. This estimate may be especially helpful for class Y radionuclides with little absorption from the GI tract and for which in vivo counting is difficult, e.g., class Y forms of plutonium, uranium, and ^{147}Pm. Additionally, fecal sampling during the rapid clearance phase may be helpful with more readily transported forms when the use of therapeutic methods invalidates the use of normal systemic retention or excretion models, e.g., during chelation therapy.

Figure C.4 shows the expected daily fecal excretion as a fraction of intake of 1-µm-AMAD particles for class W (curve A) and class Y (curve B) material for which radioactive decay, uptake from the GI tract, and systemic excretion to the GI tract are negligible (from NUREG/CR-4884 [Lessard et al. 1987] using ^{239}Pu as the model). Nearly half of the intake is excreted via feces in the first 5 days, which makes fecal sampling a very sensitive indicator of intake at that time. Excretion during the next 5 to 10 days decreases rapidly, and the daily excretion beyond about 15 days is relatively constant, representing the slowly clearing component from the pulmonary region. Note that excretion during the rapid clearance phase is

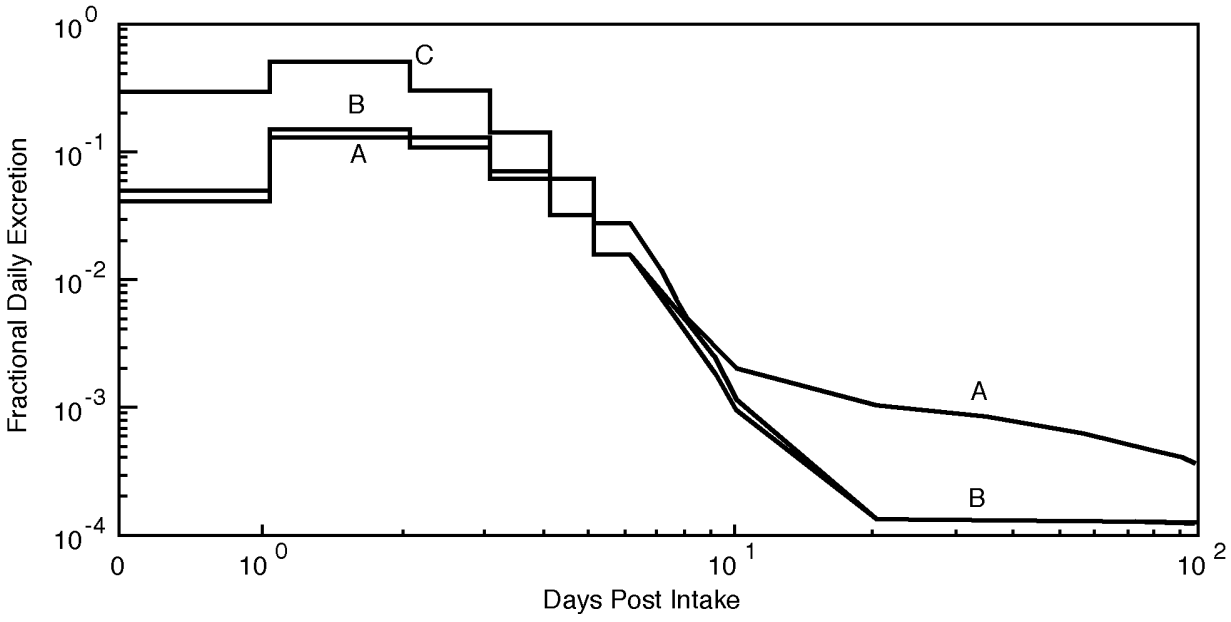

Figure C.4. Daily Fecal Excretion of Plutonium as a Fraction of Inhalation Intake for Three Intake Scenarios (all 1-µm-AMAD particle size)
A – inhalation of 1 unit of class W plutonium
B – inhalation of 1 unit of class Y plutonium
C – inhalation of 1 unit and ingestion of 1 unit of class Y plutonium

relatively independent of inhalation class, and that excretion after about 10 days is unaffected by ingestion that may have occurred along with the inhalation.

Table C.2 lists fecal excretion fractions and accumulated fractional excretion during the rapid clearance phase for the material described in the above paragraph (Lessard et al. 1987). Use of the accumulated fecal excretion data in Table C.2 may be preferred over use of the daily fractional excretion data because of the difficulty in collecting (or at least in knowing that you have collected) a day's excretion. (See below for pitfalls discussion of this problem.) Because of problems discussed below, fecal sampling is best used in combination with other bioassay measurements. When the quality of data from the other bioassay measurements is good, e.g., the data are not near the detection level or are not biased by the effects of medication, then preference should be given to estimates of intake from the other bioassay measurements. However, for moderately or poorly absorbed radionuclides, fecal sampling during the first few days after an inhalation intake is a very sensitive indicator.

The extent of use of fecal sampling depends on the expected severity of the intake. For intakes that are estimated (based on workplace monitoring) to result in a committed effective dose equivalent of less than 100 mrem, or for situations where confirmation that an intake did not occur is desired, two fecal samples collected from 24 to 72 hours after the potential intake are recommended. If the samples show significant detectable activity (e.g., implying a dose greater than 100-mrem), additional bioassay measurements should be

Table C.2. Fraction of Intake Excreted via Feces Following an Acute Inhalation of Poorly Absorbed Material[(a)]

	Intake Fraction Excreted During Interval							
	1-µm-AMAD		**5-µm-AMAD**		**1-µm-AMAD**		**5-µm-AMAD**	
Days Post Intake	**Class W**	**Class Y**	**Class W**	**Class Y**	**Class W**	**Class Y**	**Class W**	**Class Y**
1 (0 – 24 hours)	0.044	0.054	0.091	0.106	0.044	0.054	0.091	0.106
2 (24 – 48 hours)	0.13	0.160	0.26	0.30	0.17	0.21	0.35	0.41
3 (48 – 72 hours)	0.11	0.130	0.20	0.23	0.28	0.34	0.55	0.64
4 (72 – 96 hours)	0.063	0.071	0.11	0.12	0.35	0.42	0.66	0.76
5 (96 – 120 hours)	0.033	0.035	0.048	0.053	0.38	0.45	0.71	0.81

(a) Modeled using ^{239}Pu with f_1 factors as given in Section 8.2.2.

obtained, including additional fecal samples collected from 20 to 100 days post intake, after early clearance to aid in distinguishing ingestion, class W, or Y components. In some situations these additional fecal samples may still be more sensitive to intake than other bioassay measurements, but special care is necessary to avoid further small intakes prior to collection of these additional samples. Samples collected after 5 to 7 days post intake show a marked decrease in sensitivity to intake detection.

If workplace monitoring results indicate a more serious intake, all fecal excretion from about 6 to 72 hours post intake should be collected. The total result from all samples collected during this period is divided by the fractional accumulated excretion for the first 3 days post intake to provide an estimate of intake. Table C.2 can be used for isotopes of plutonium and uranium (also other radionuclides where GI absorption and radioactive decay can be neglected); NUREG/CR-4884 (Lessard et al. 1987) can be used for other radionuclides (1-µm-AMAD particles only).

The fecal samples obtained after 20 days post intake can help determine the inhalation class and clearance rate from the pulmonary region to the GI tract. But recognize that, despite appearances in the ICRP lung model, the clearance rate from the pulmonary region to the GI tract (compartment g) is not necessarily identical to the clearance rates from the pulmonary region to the blood or lymph system (compartments e and h). Urine data provide the best estimates of the latter clearance rates. Lacking good urine data, default values should be used. For example, if fecal data indicate a long-term clearance half-time of 400 days and urine data are lacking or are not definitive, the material should be assumed to be class Y and clearance half-times of 500 days should be used for compartments e and h.

Reference Man (ICRP 1974) excretion for adult's ranges from 60 to 500 g/day, with a recommended average of 135 g/day for an adult male and 110 g/day for an adult female. Note that these values represent excretion "per day" not excretion "per bowel movement." When a single bowel movement is collected, it is generally interpreted as representing excretion for 1 day. If the sample is greater than 60 g, no normalization is used. If the sample is less than 60 g, the sample results should be normalized to 135 g for males and 110 g for females. If total accumulated excretion over a time period was requested and there is no apparent reason to suspect that total excretion was not provided, then all sample results should be used as is, without regard for the mass of individual samples. If excretions

were missed during the time period, then normalization of the total mass to the total mass expected based on the reference values given above should be used.

There are problems with interpretation of fecal data for which the dosimetrist needs to stay alert. One is the possibility of interference by ingested material. In Figure C.4, curve C shows the expected daily fecal excretion from a unit intake of class Y material by inhalation and a unit intake by ingestion. Note that curve C follows the same general shape of the other curves, and hence a combined inhalation/ ingestion intake of nearly equal proportions would not be readily discernible using early fecal data. Also note that the influence of the ingestion remains significant until about 8 days post intake. The accumulated fecal excretion in the first 3 days from this intake would be 3.5 times the accumulated fecal excretion from inhalation alone, and hence the estimate of intake determined in this manner would be 3.5 times too great. The point is that because ingested material contributes *in toto* to fecal excretion, it has a magnifying effect on the determination of inhalation intake. For sufficiently large intakes, this problem can be overcome by sampling during the slow clearance phase.

Interpretation of fecal data is also sensitive to the size of the particles inhaled. For example, Figure C.5 shows fractional daily excretion for class W and class Y plutonium for 3- and 8-µm-AMAD particles. In these cases collection of the first 3 days' feces and assumption of 1-µm-AMAD particles would result in overestimation of the intake by 1.7 and 2.2 for intakes actually involving class W 3- and 8-µm-AMAD particles, respectively, and by 1.6 and 2.0 for class Y 3- and 8-µm-AMAD particles, respectively. Additional error would then be made in the calculation of doses to the lung and systemic organs because the fraction of intake deposited in the pulmonary region of the lung and/or transferred to the blood would be overestimated also.

Another difficulty arises from single-voiding samples. These are generally easier to obtain than total excretion over a specific period. But both inter- and intra-individual variation in the regularity of bowel movements can introduce large uncertainties if a single voiding is used to represent daily excretion. Normalization by mass can help reduce error when a single sample represents a fraction of a day's excretion, but it does not help when a single sample represents excretion for several days.

Contamination of a fecal sample by urine should be avoided, but generally will not introduce significant error if it occurs.

For uranium, natural daily ingestion (about 2 µg but variable [ICRP 1979]) needs to be taken into account.

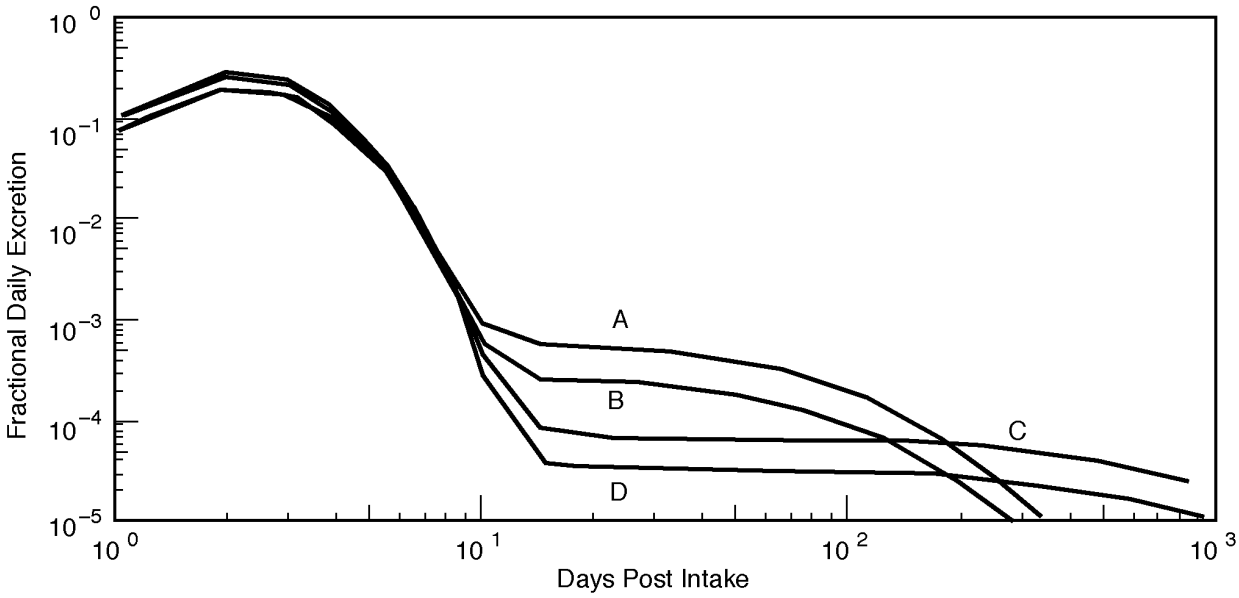

Figure C.5. Daily Fecal Excretion of Plutonium as a Fraction of Inhalation Intake for Four Intake Scenarios
A – class W, 3-µm-AMAD particles
B – class W, 8-µm-AMAD particles
C – class Y, 3-µm-AMAD particles
D – class Y, 8-µm-AMAD particles

C.4 References

Eckerman, K. F., S. B. Watson, and M. R. Ford. 1981. *Internal Dosimetry Data and Methods of the ICRP Part 2, Volume 1: Committed Dose Equivalent and Secondary Limits*. NUREG/CR-1962, U.S. Nuclear Regulatory Commission, Washington, D.C.

International Commission on Radiological Protection (ICRP). 1974. *Report of the Task Group on Reference Man*. ICRP publication 23. Pergamon Press, New York.

International Commission on Radiological Protection (ICRP). 1979. "Limits for intakes of radionuclides by workers." (ICRP publication 30, part 1). *Annals of the ICRP*, 2:3/4. Pergamon Press, New York.

International Commission on Radiological Protection (ICRP). 1994. "Human respiratory tract model for radiological protection." (ICRP publication 66). *Annals of the ICRP*, 24:1-3. Pergamon Press, New York.

Lessard, E. T., X. Yihua, K. W. Skrable, G. E. Chabot, C. S. French, T. R. La Bone, J. R. Johnson, D. R. Fisher, R. Belanger, and J. L. Lipsztein. 1987. *Interpretation of Bioassay Measurements*. NUREG/CR-4884, U.S. Nuclear Regulatory Commission, Washington, D.C.

National Council on Radiation Protection and Measurements (NCRP). 1997. *Deposition, Retention, and Dosimetry of Inhaled Radioactive Substances***.** NCRP Report No. 125, Bethesda, Maryland.