Cameco

Lung Counting at Fuel Services

Cameco

Life after Phoswich

Why do we need a New Lung Counter ?

Why do we need a New Lung Counter ?

- **Replacement parts are no longer available for the current Phoswich system**

Why do we need a New Lung Counter ?

- Replacement parts are no longer available for the current Phoswich system
- **Inherent problems with backscatter limit our ability to drive down the detection limits**

Why do we need a New Lung Counter ?

- Replacement parts are no longer available for the current Phoswich system
- Inherent problems with backscatter limit our ability to drive down the detection limits
- **Background size and shape dependant**

L.L.L. Phantom in Counting Geometry

How can we drive down the detection limits ?

How can we drive down the detection limits ?

- **Count longer**

How can we drive down the detection limits ?

- Count longer
- **Spiking sample spectrums**

How can we drive down the detection limits ?

- Count longer
- Spiking sample spectrums
- **Body matching**

How can we drive down the detection limits ?

- Count longer
- Spiking sample spectrums
- Body matching
- **Spectrum summing**

1,5&10 Hour Lung Counts

Highlighting the U235 Peak at 186KeV

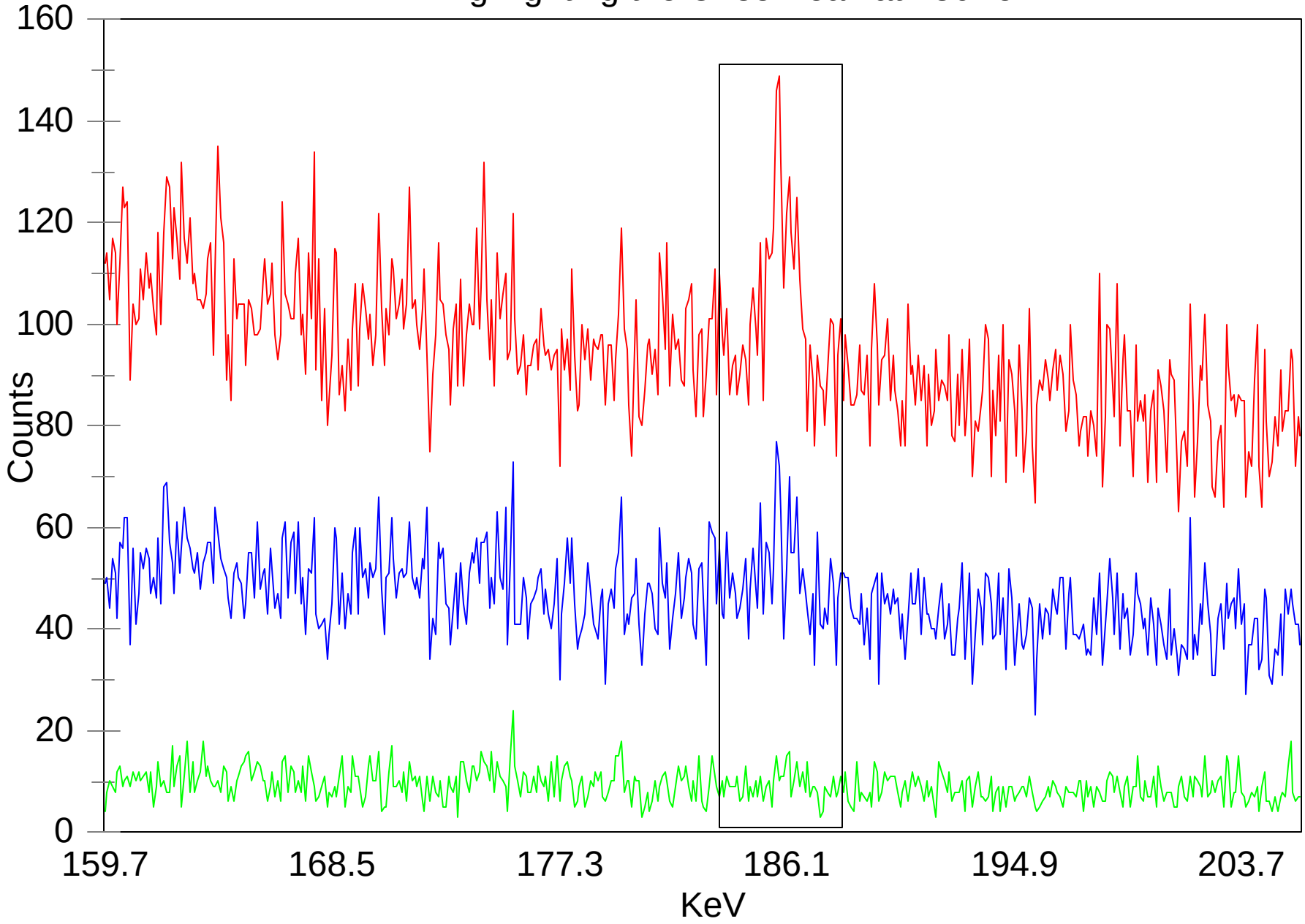

Summed 1 hour spectrums

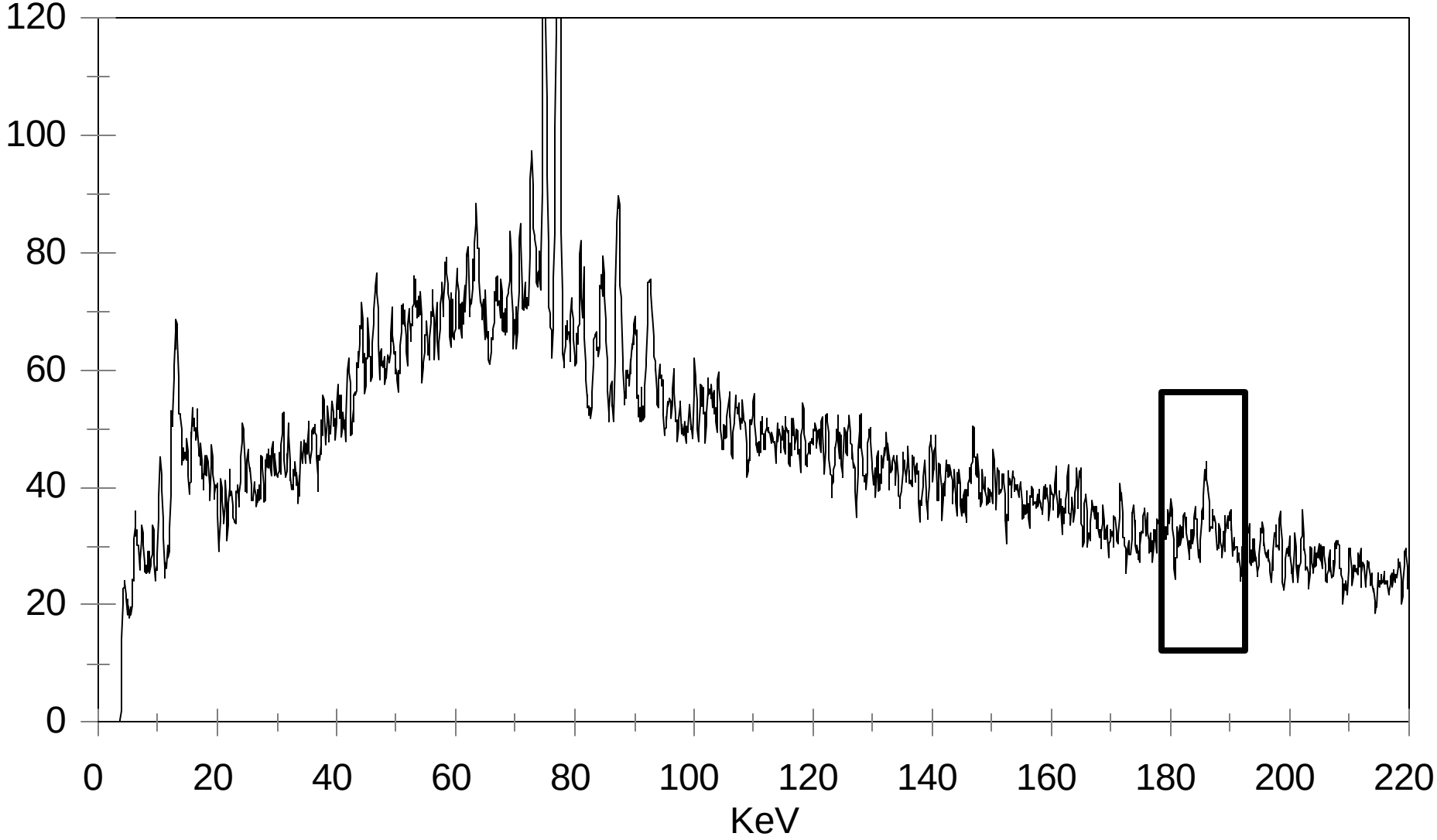

—— Standard Weighted 5 point Moving Avg.

What were the major design considerations ?

What were the major design considerations ?

- **What is the optimum detector crystal diameter and thickness**

What were the major design considerations ?

- What is the optimum detector crystal diameter and thickness
- **How heavy of a shield can you put in a trailer and which materials are best**

X48476
mac

JAERI Phantom in
Counting Configuration
Interior dimensions: 4'4" tall, 3' deep, 6'6" long

Human Background

(percent differences relative to average of all values)

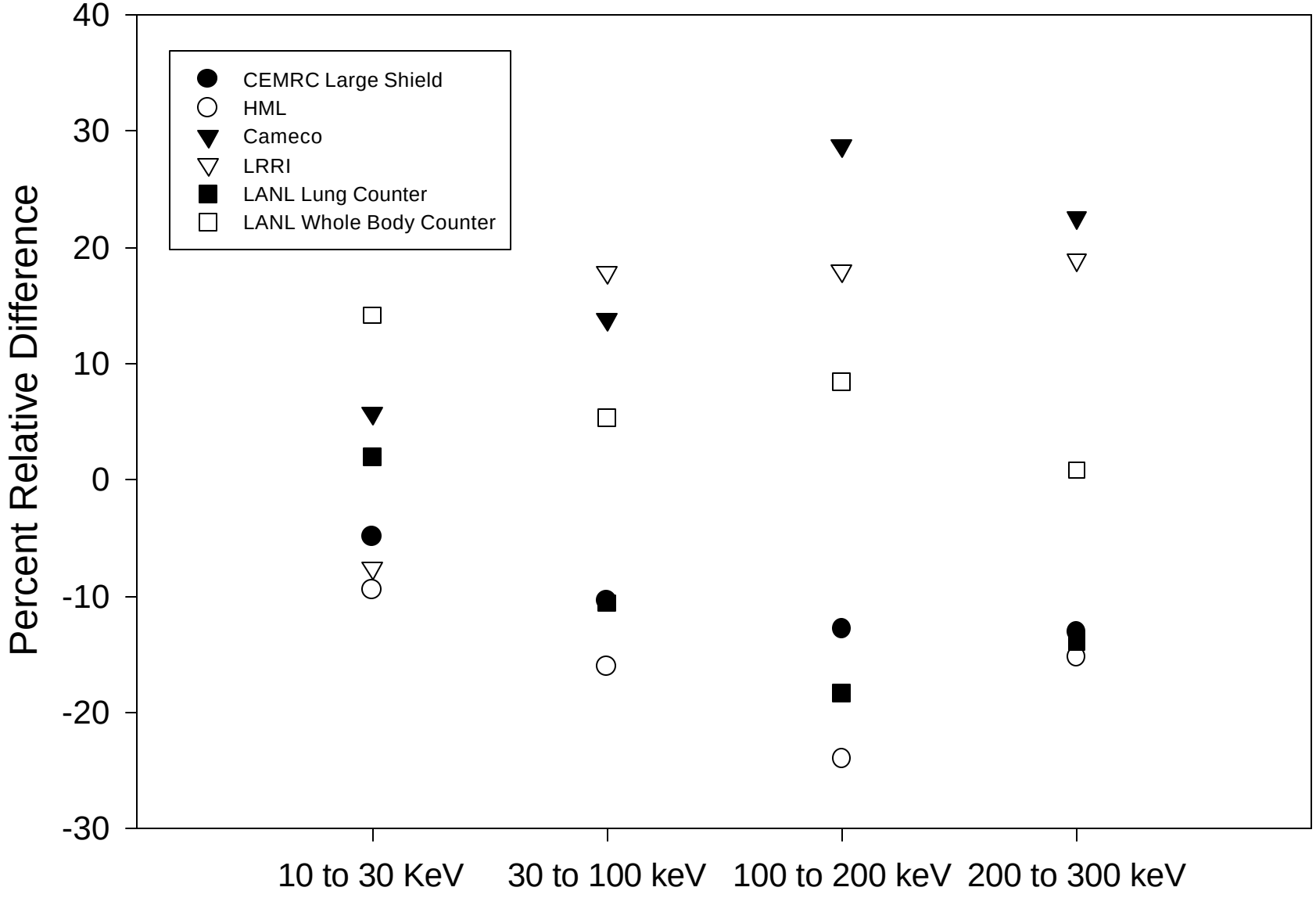

Out of Shield Backgrounds

Location	CPS at 63keV	CPS at 93 keV	CPS at 185 keV
Cameco	4.5242	3.5563	1.2511
HML	3.6075	2.9006	1.1725
CEMRC	1.0348	0.94361	0.44483
Steve's House	0.70139	0.65667	0.31306
Dalewood Golf Course	0.57306	0.5775	0.28389

EXIT
DANGER
NO SMOKING

What were the major design considerations ?

- What is the optimum detector crystal diameter and thickness
- How heavy of a shield can you put in a trailer and which materials are best
- **Which detector support mechanism provides the greatest flexibility and hence the highest efficiency**

CANBERRA
CANBERRA

CANBERRA
CANBERRA

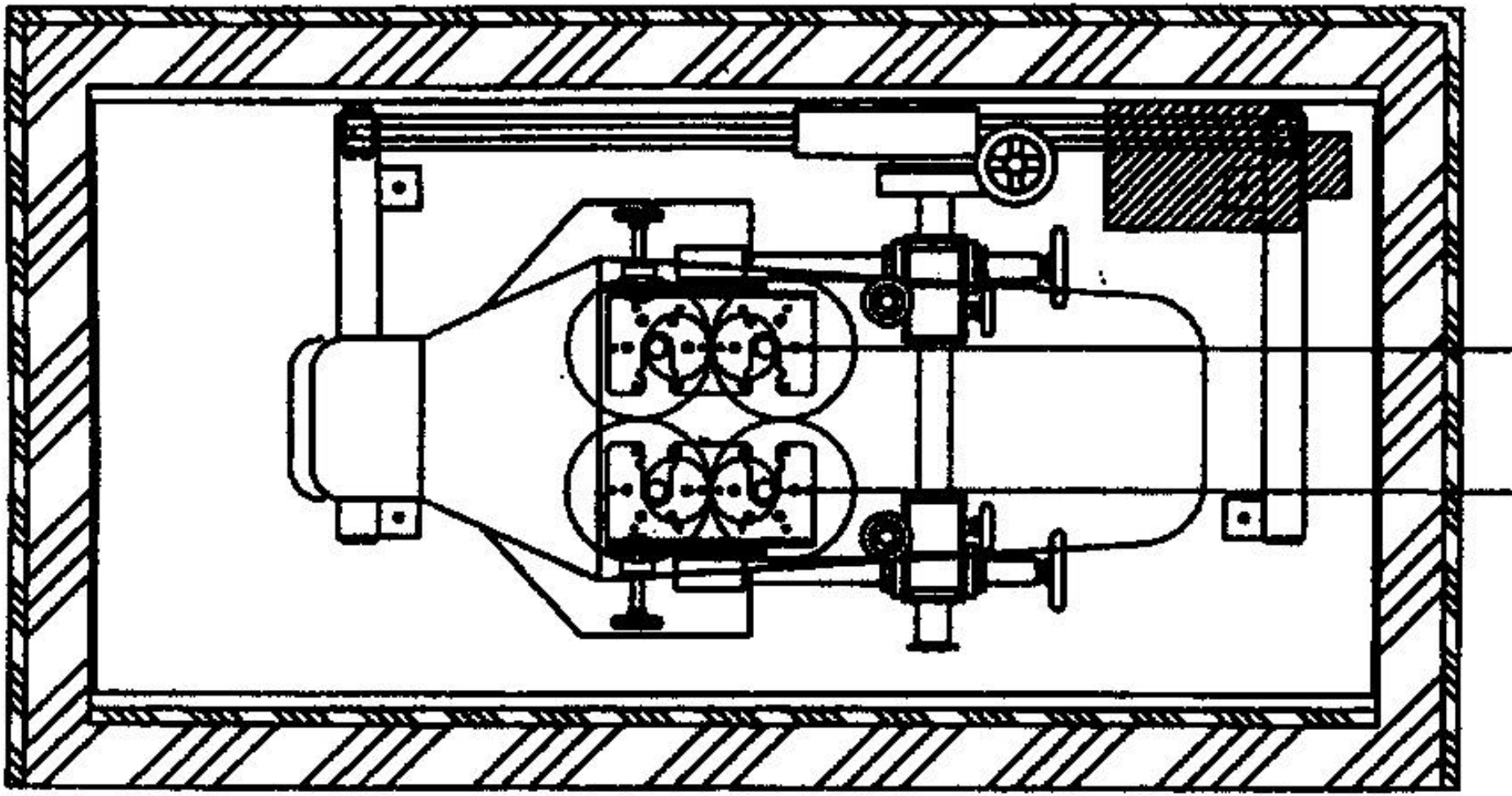

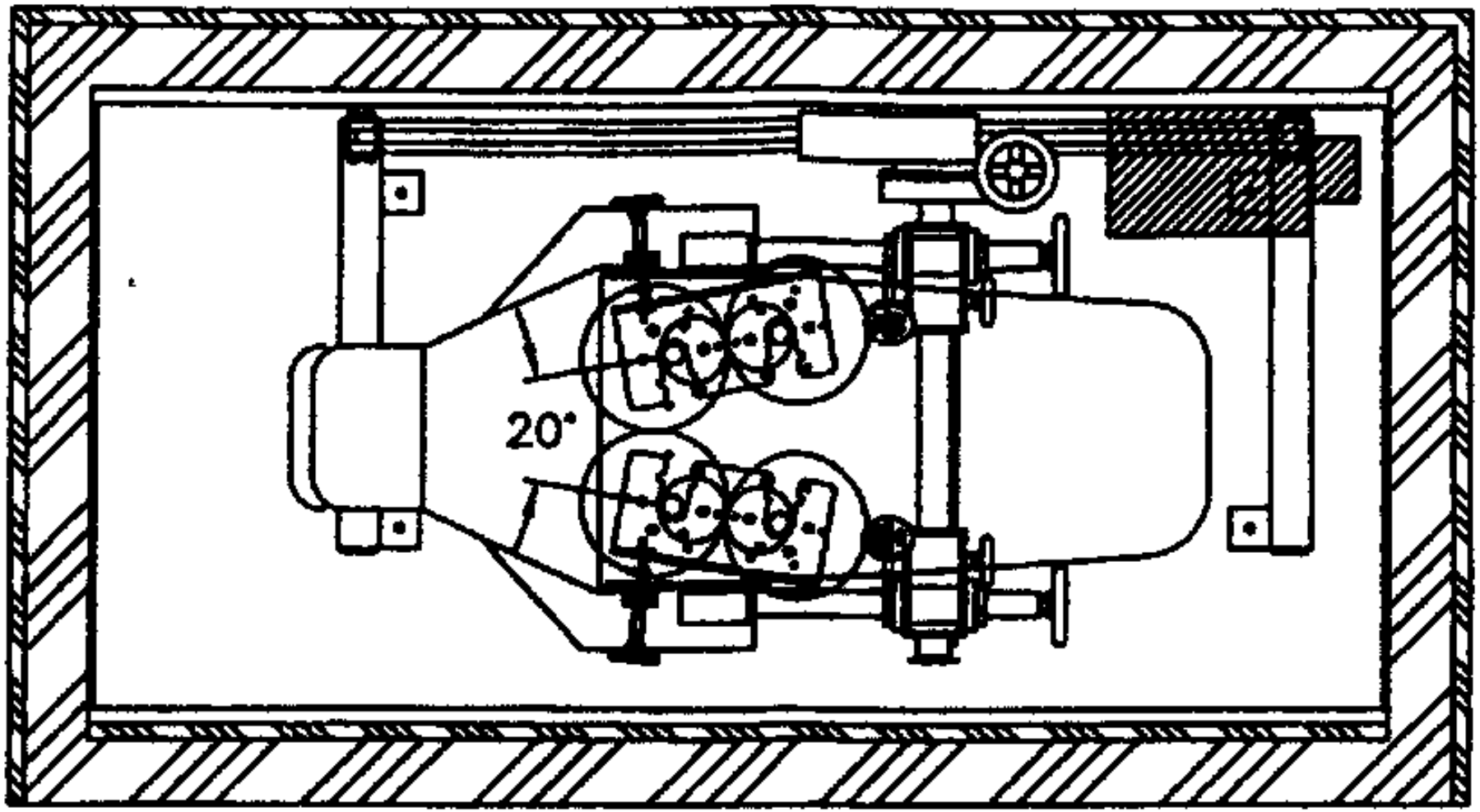
20°

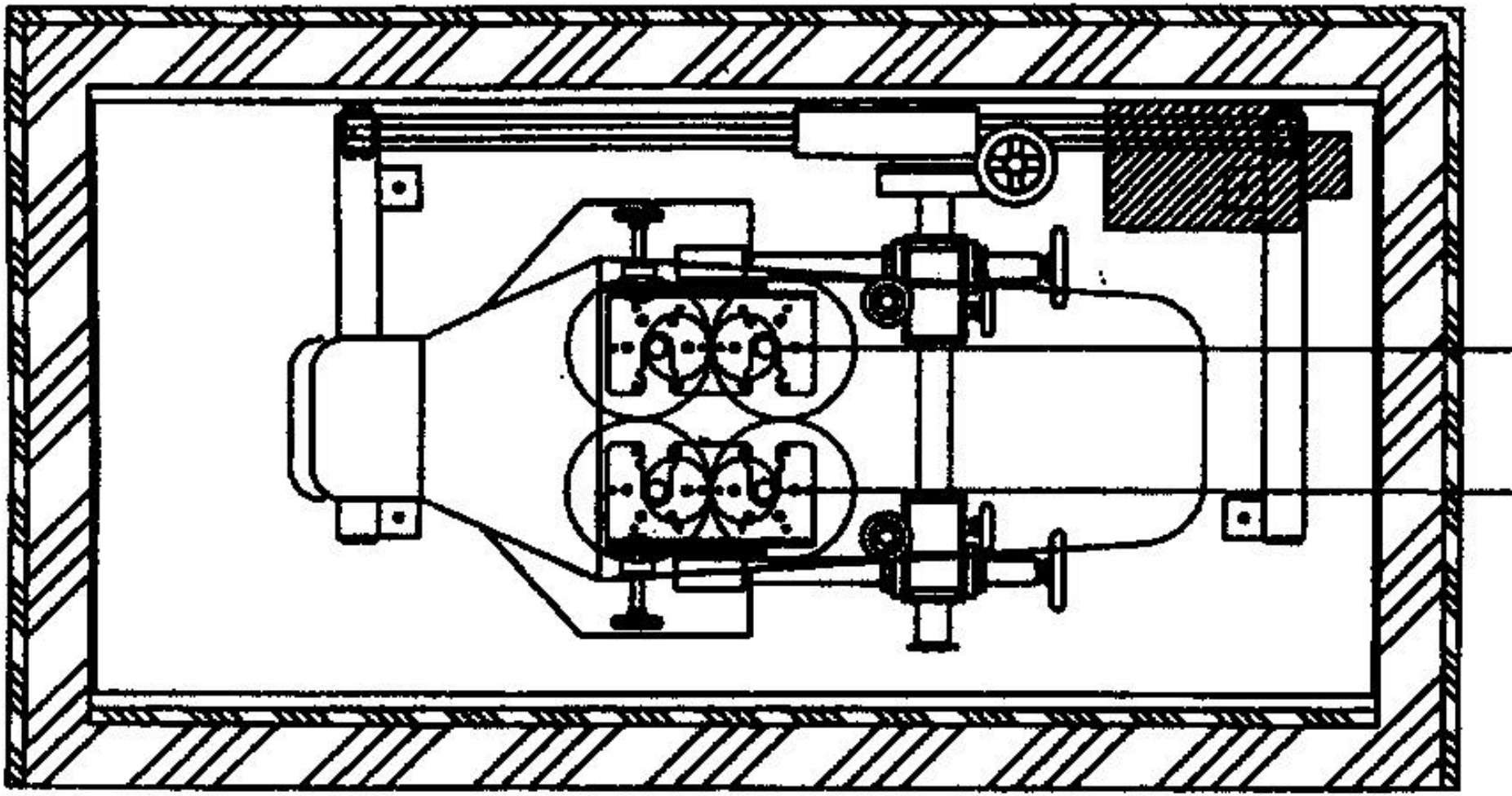

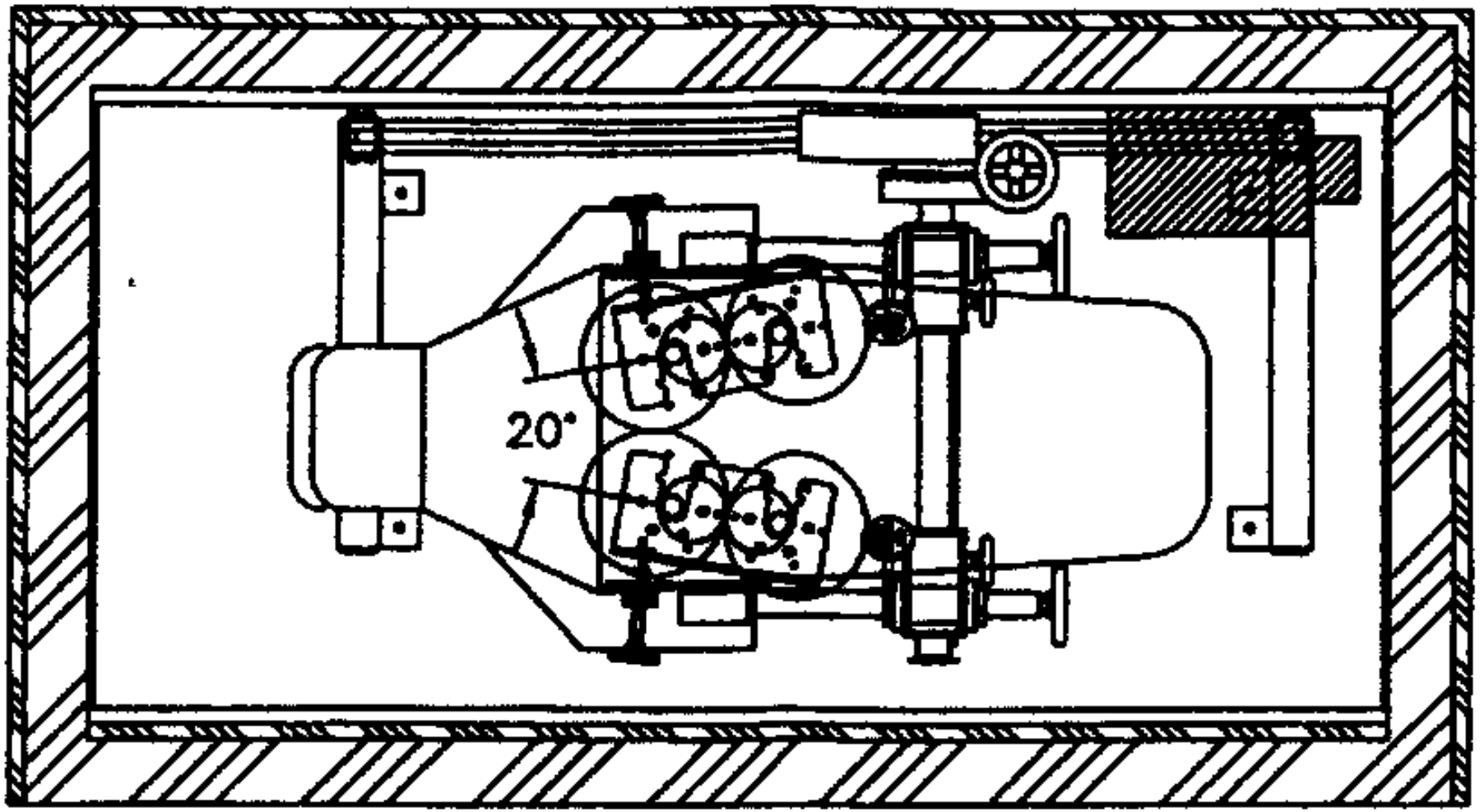
20°

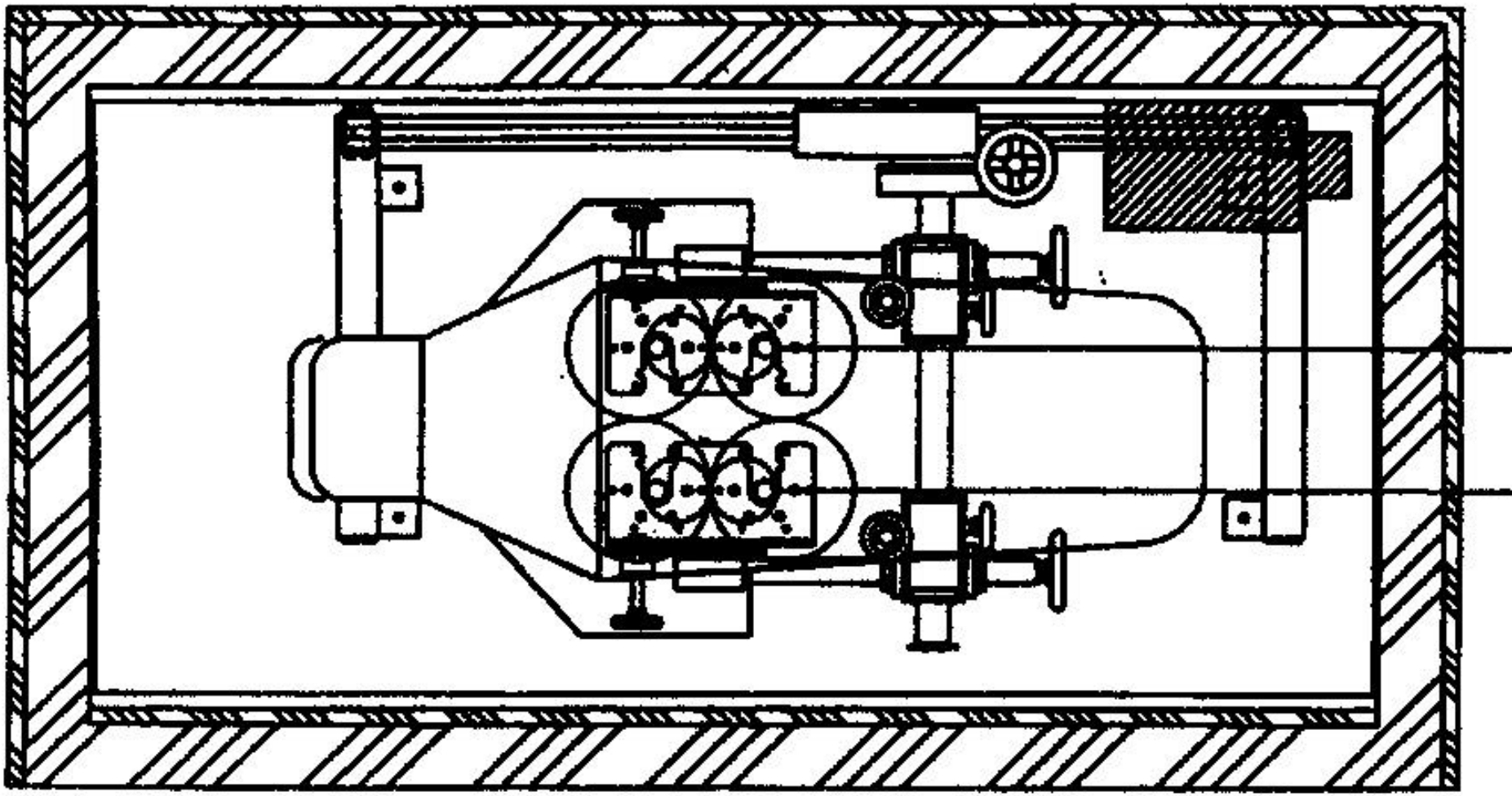

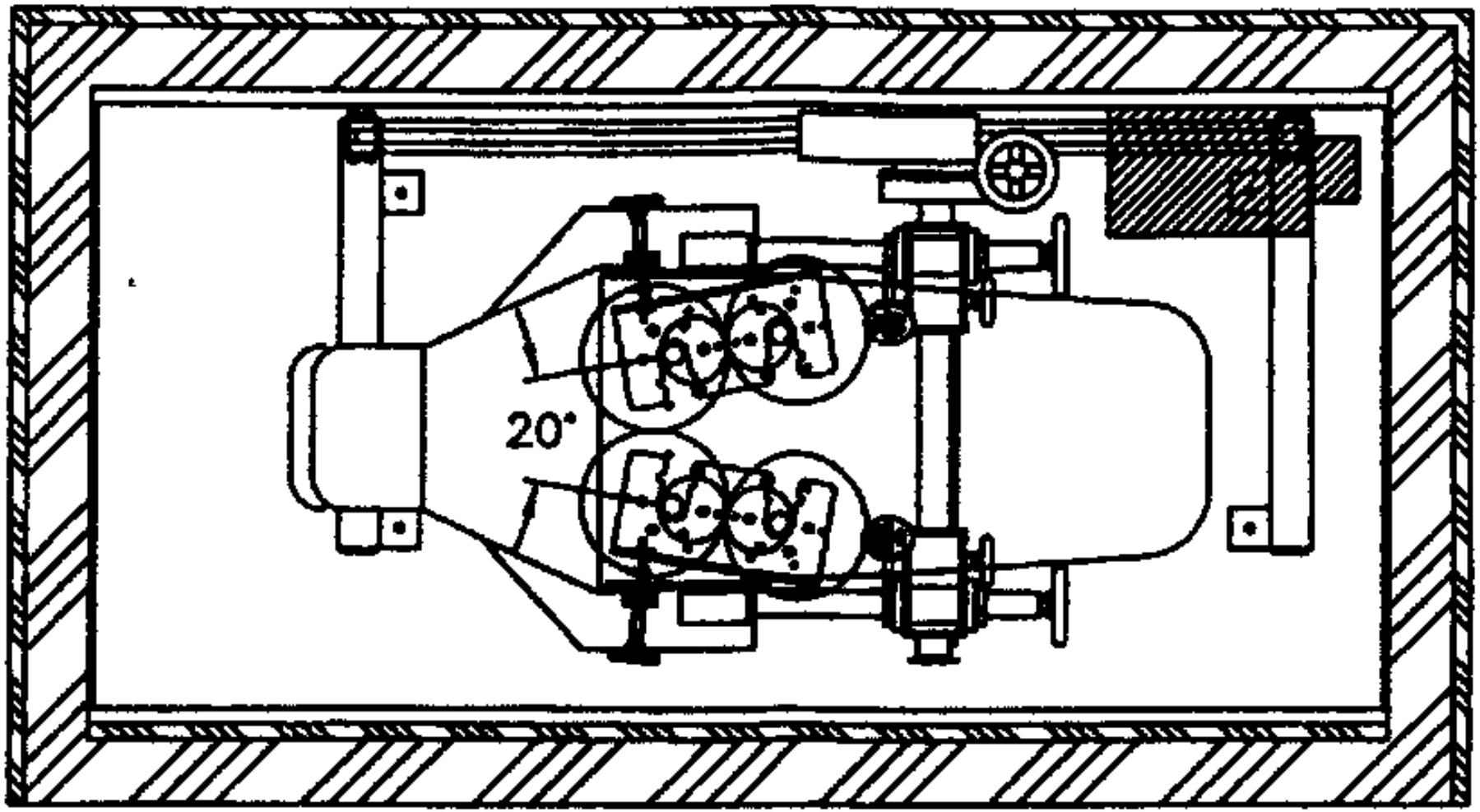
20°

What were the major design considerations ?

- What is the optimum detector crystal diameter and thickness
- How heavy of a shield can you put in a trailer and which materials are best
- Which detector support mechanism provides the greatest flexibility and hence the highest efficiency
- **How do you support the subject in the optimal counting geometry for extended periods of time and still maintain an ergonomic environment**

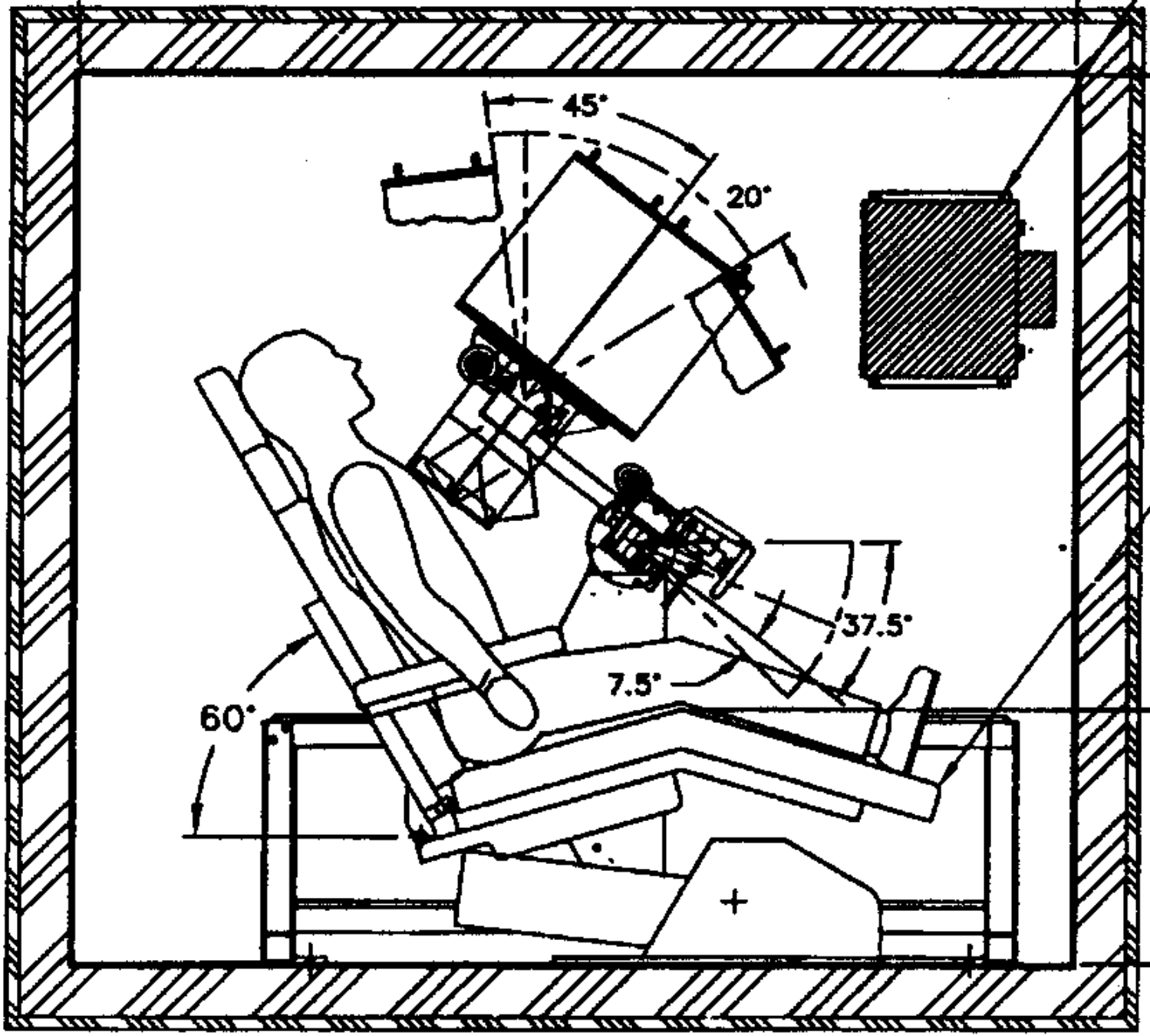
45°
20°
37.5°
7.5°
60°

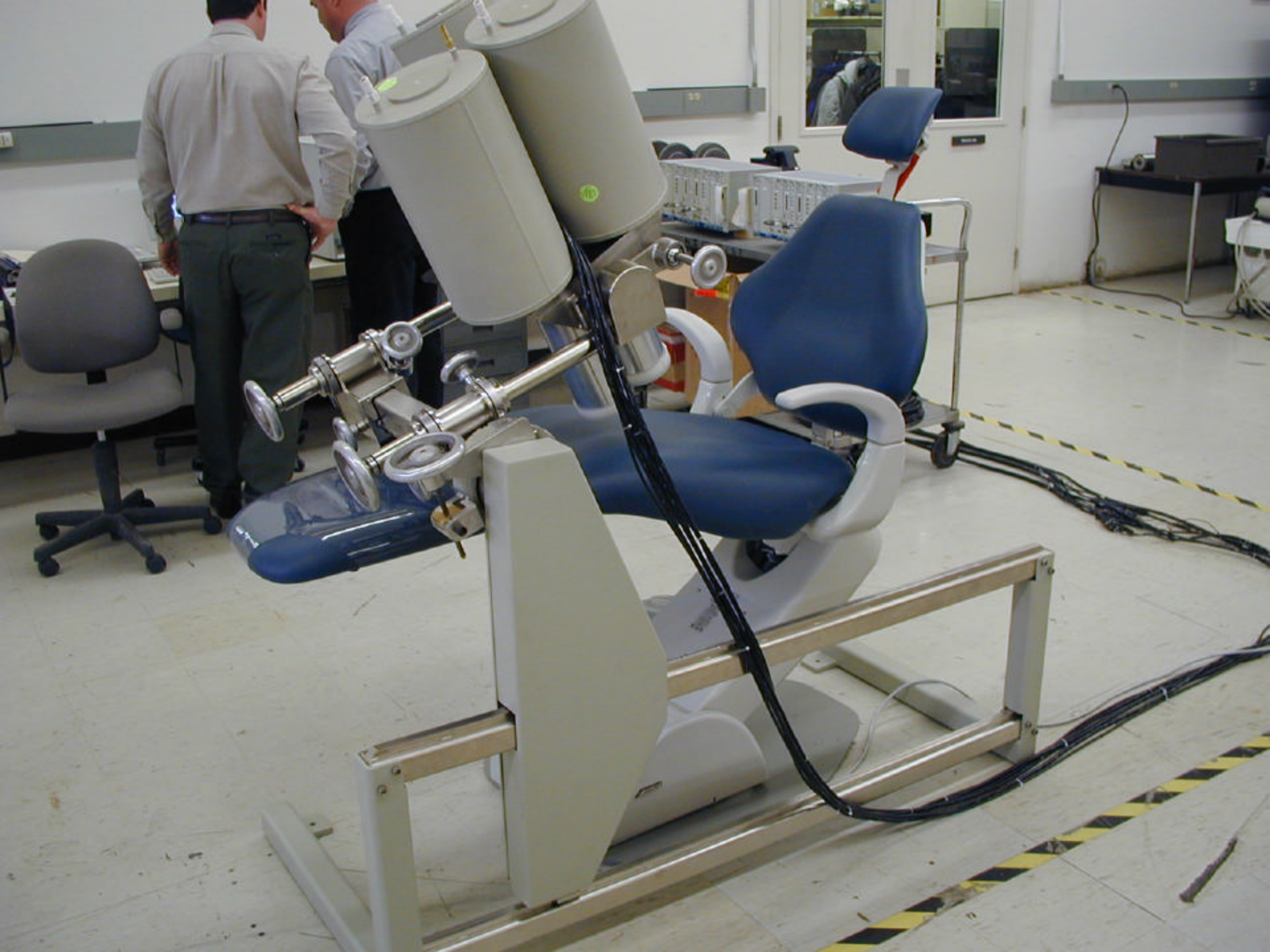

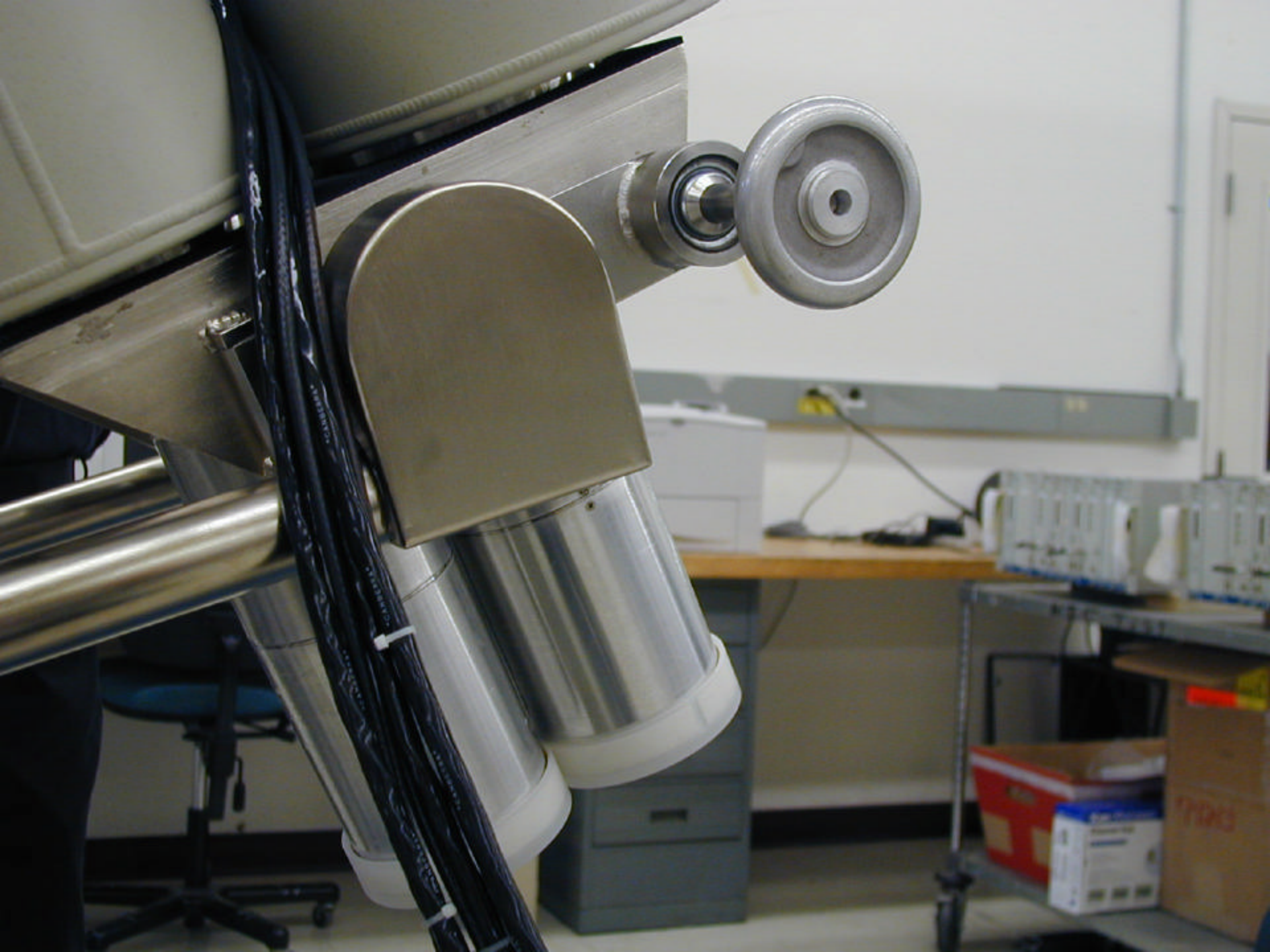

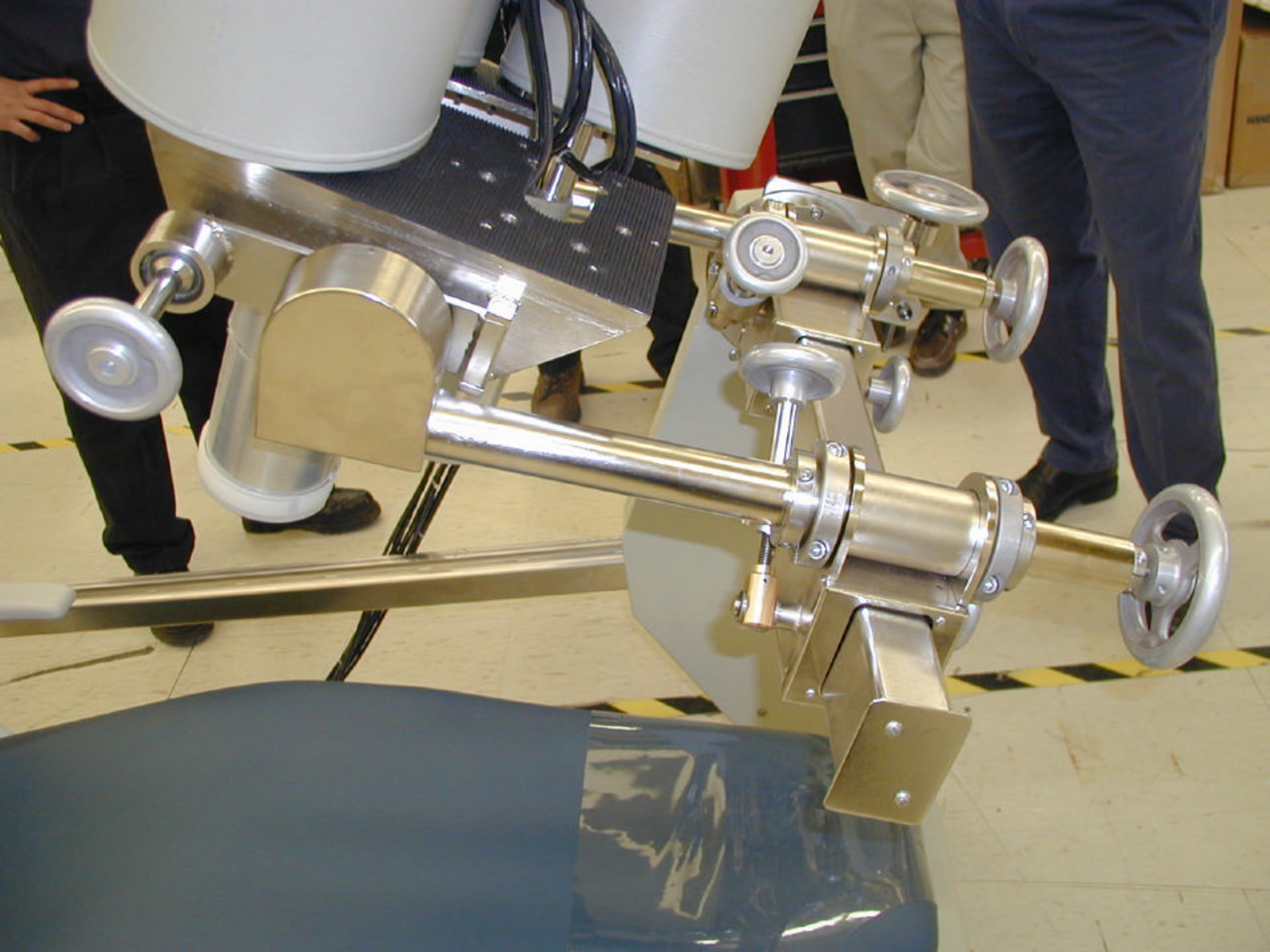

What are the major operational considerations ?

What are the major operational considerations ?

- **How will we estimate chest wall thickness and what is its impact on count duration**

Fig. 2: Plot of observed CWT vs calculated CWT

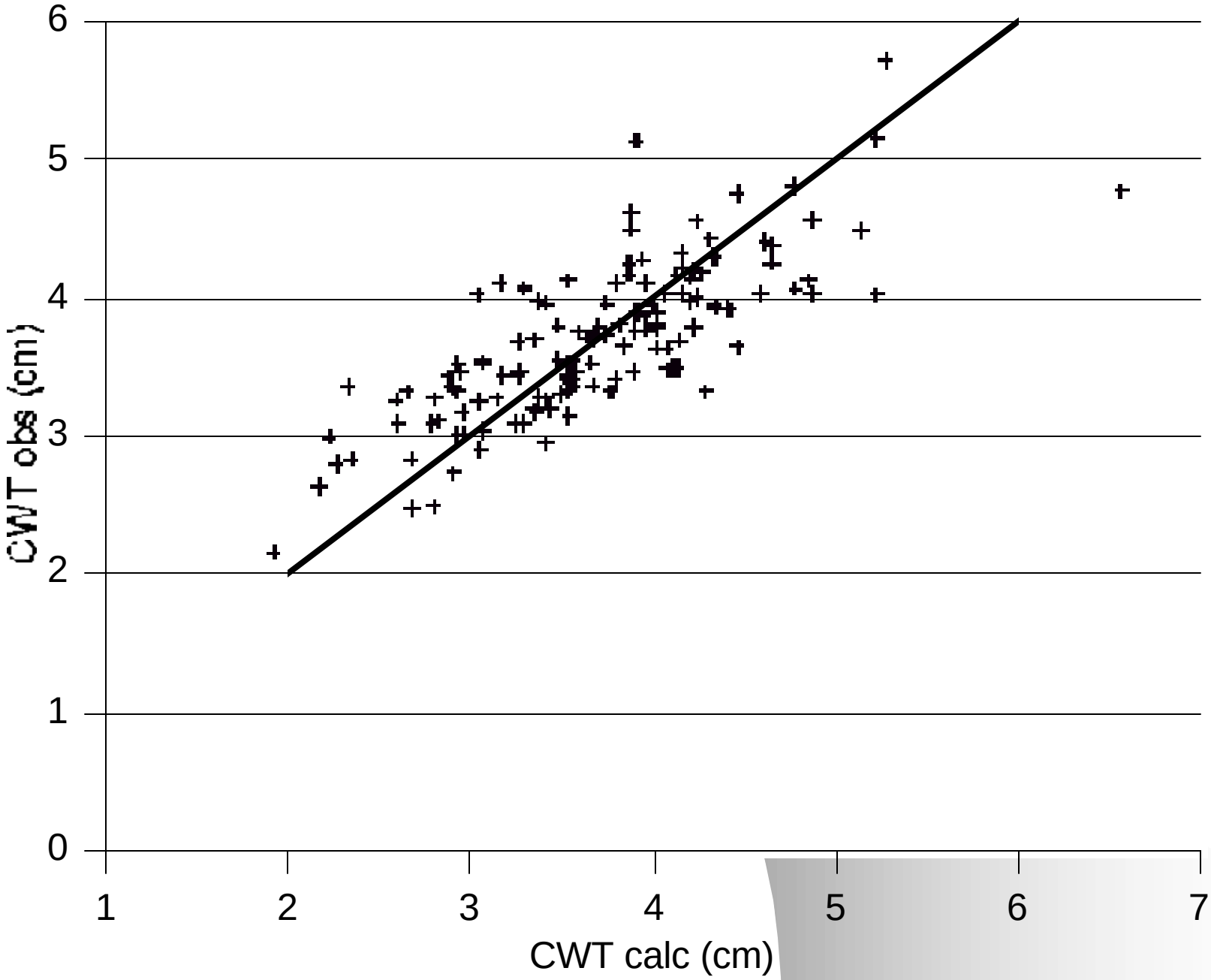

Port Hope Employee Group Distribution as a Function of Chest Wall Thickness
Data taken from Health Canada Report HMLTD-02-03

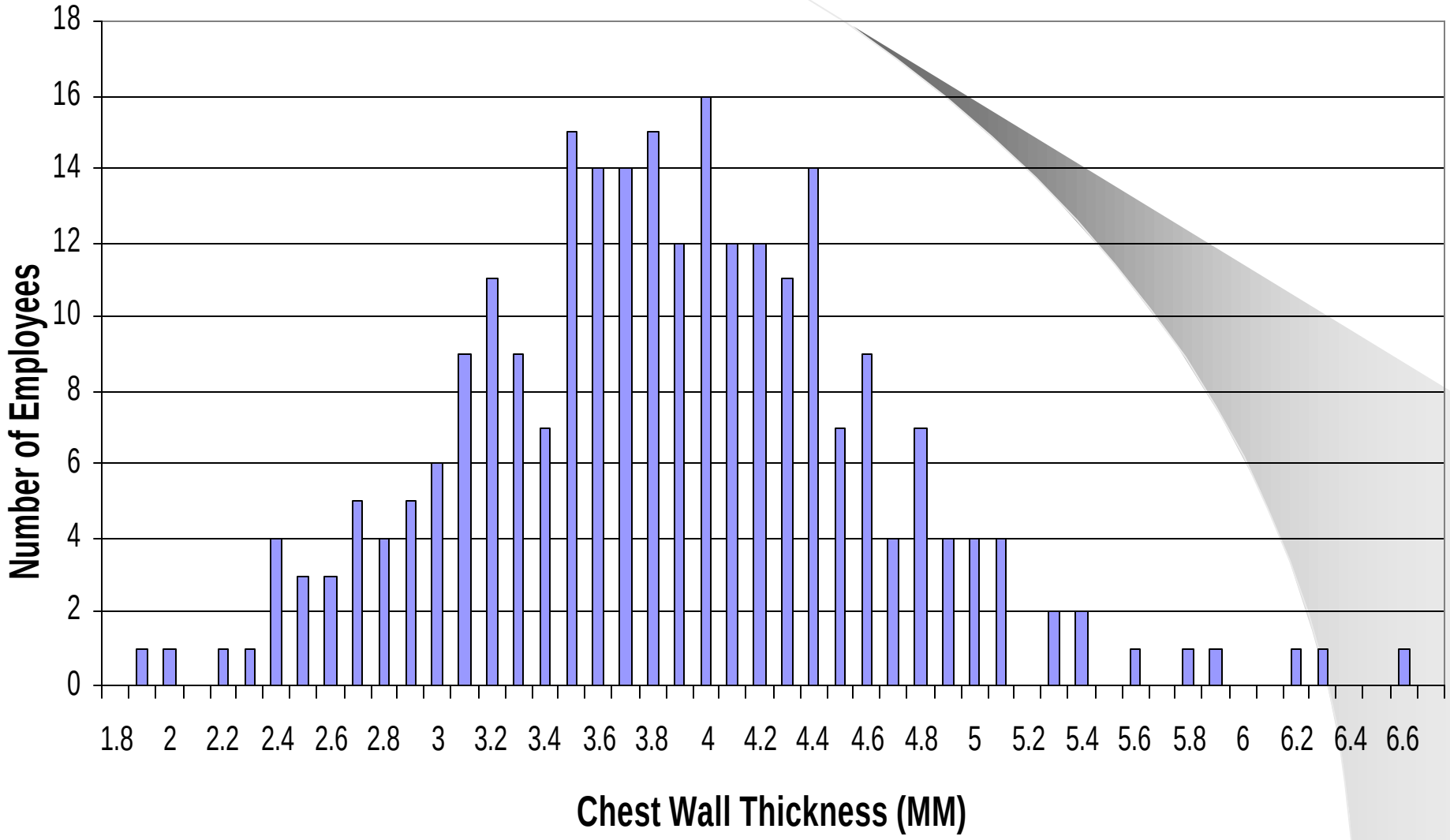

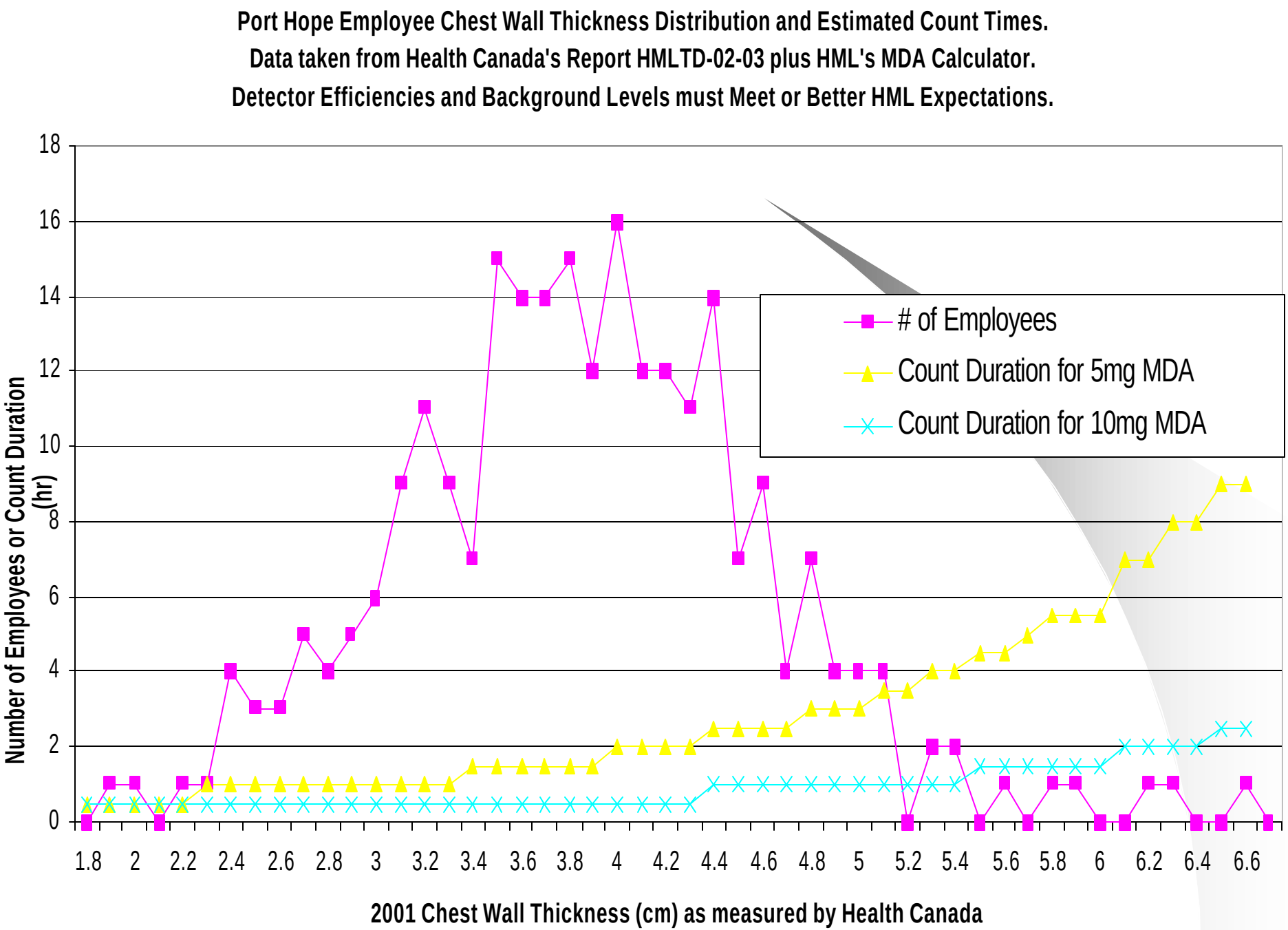
Port Hope Employee Chest Wall Thickness Distribution and Estimated Count Times.
Data taken from Health Canada's Report HMLTD-02-03 plus HML's MDA Calculator.
Detector Efficiencies and Background Levels must Meet or Better HML Expectations.
Number of Employees or Count Duration (hr)
0
2
4
6
8
10
12
14
16
18
1.8
2
2.2
2.4
2.6
2.8
3
3.2
3.4
3.6
3.8
4
4.2
4.4
4.6
4.8
5
5.2
5.4
5.6
5.8
6
6.2
6.4
6.6
2001 Chest Wall Thickness (cm) as measured by Health Canada
# of Employees
Count Duration for 5mg MDA
Count Duration for 10mg MDA

SonoSite
180
PLUS
Abd
C60
IVC / RENAL VEIN
12.
2000Feb03 03:47
Text / Picto
Measure
Patient
Select
Freeze
D
CPD
M
2D
Cap
Shift
Space
Enter

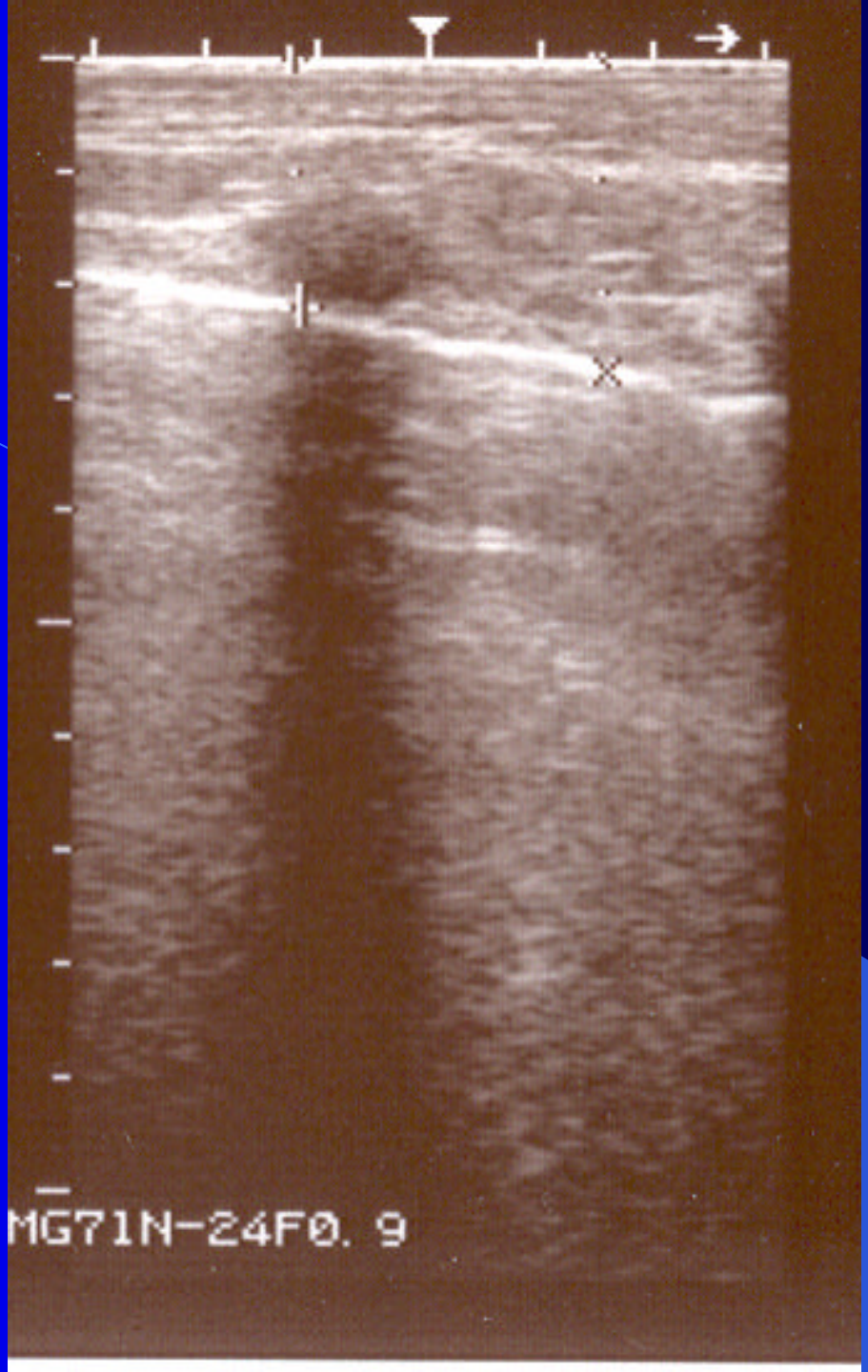
MG71N-24F0.9

What are the major operational considerations ?

- How will we estimate chest wall thickness and what is its impact on count duration
- **How low and how stable does the background need to be**

What are the major operational considerations ?

- How will we estimate chest wall thickness and what is its impact on count duration
- How low and how stable does the background need to be
- **How do you monitor for surface contamination**

What are the major operational considerations ?

- How will we estimate chest wall thickness and what is its impact on count duration
- How low and how stable does the background need to be
- How do you monitor for surface contamination
- **How will we entertain the subject during the count**

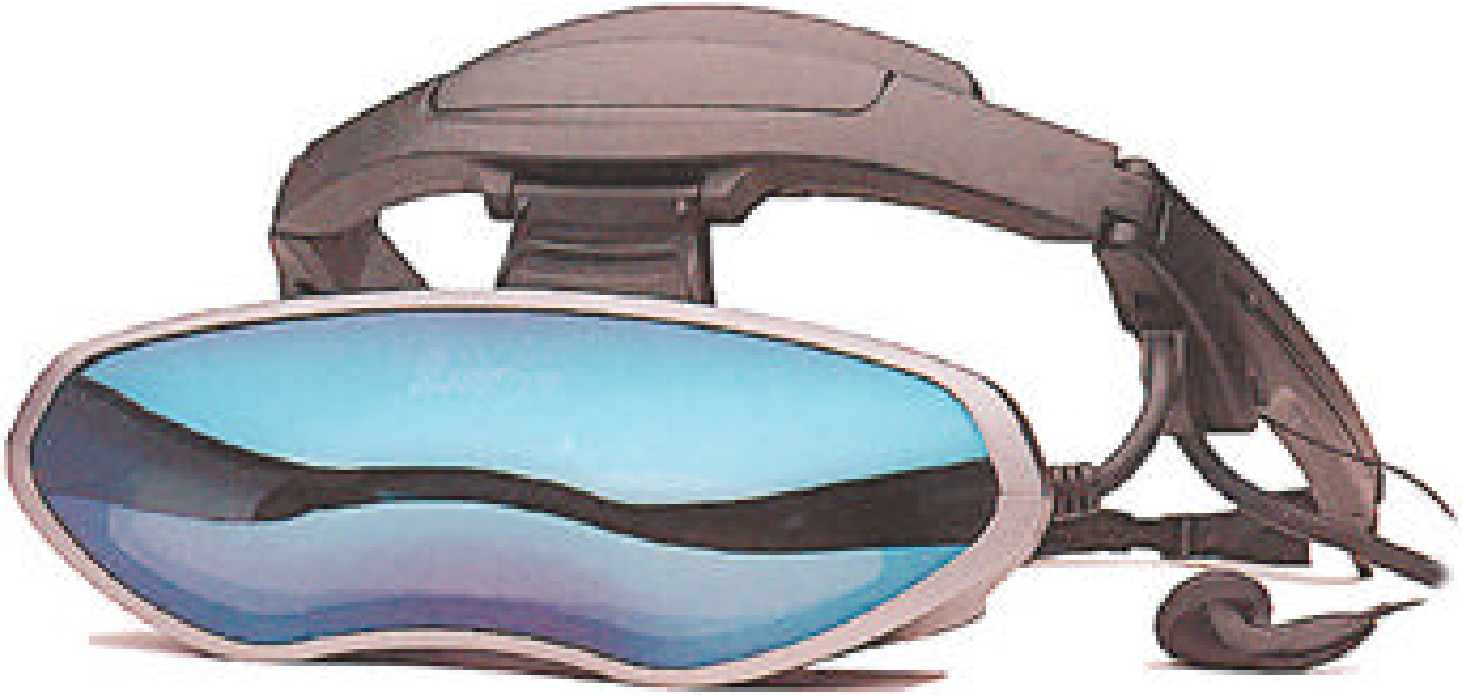

Cameco

What are the next steps ?

What are the next steps ?

- **Finish the construction of the new lung counter**

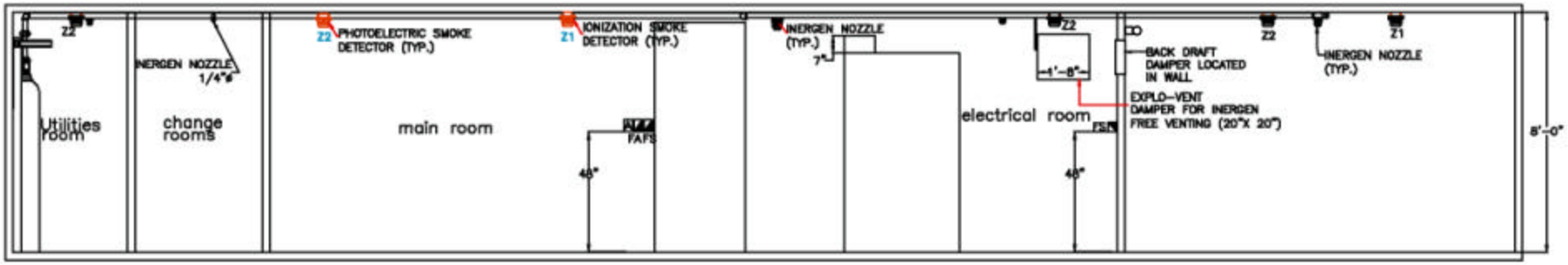

ELEVATION VIEW
N T S

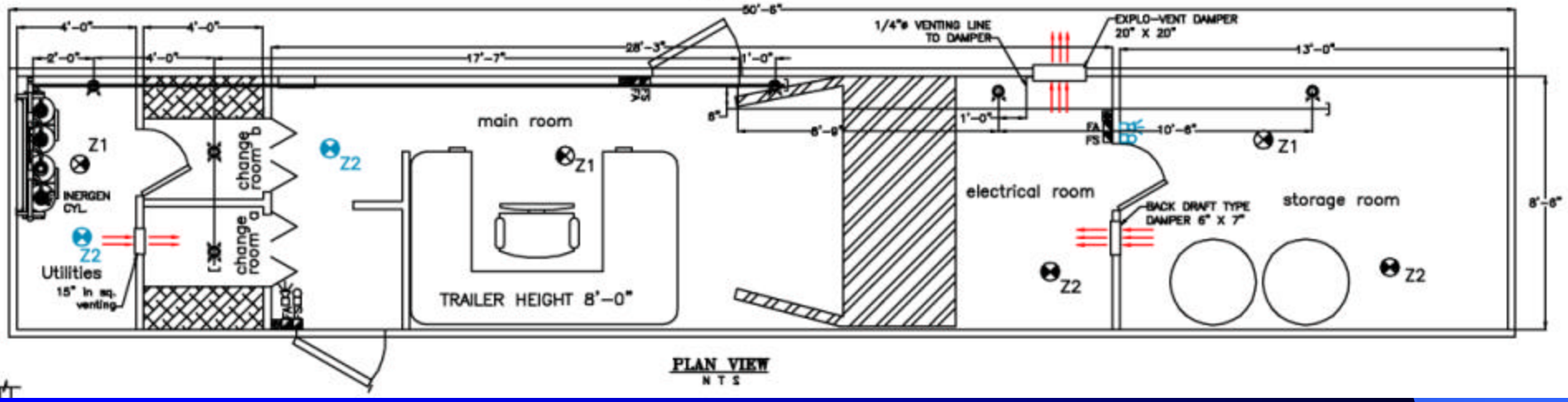

PLAN VIEW
N T S

What are the next steps ?

- Finish the construction of the new lung counter
- **Locate and evaluate potential sites**

What are the next steps ?

- Finish the construction of the new lung counter
- Locate and evaluate potential sites
- **Calibration certification by HML**

What are the next steps ?

- Finish the construction of the new lung counter
- Locate and evaluate potential sites
- Calibration certification by HML
- **Evaluate background level and stability at each of the potential sites**

What are the next steps ?

- Finish the construction of the new lung counter
- Locate and evaluate potential sites
- Calibration certification by HML
- Evaluate background level and stability at each of the potential sites
- **Choose a site and install services**

What are the next steps ?

- Finish the construction of the new lung counter
- Locate and evaluate potential sites
- Calibration certification by HML
- Evaluate background level and stability at each of the potential sites
- Choose a site and install services
- **Commence lung counting**

Cameco

The End