Hydrogen Production and Northwest Transportation Conference
Seattle, June 16, 2003

Stochastic Energy Source Access Management and Integration Through Hybrid Combination with Hydrogen Plant

Professor Kai Strunz
Department of Electrical Engineering
University of Washington
Campus Box 352500
Seattle, WA 98195-2500, USA

Contact email: strunz@ee.washington.edu
Web: http://www.ee.washington.edu/research/sesame/

The future of electricity generation and transportation is marked by two major trends: the rapid growth in the use of distributed and renewable energy sources and the development of the hydrogen economy. This transformation promises exciting advantages that include a higher efficiency of electricity generation and transportation, increased economic growth, less dependency on imports of fossil fuels, and a cleaner environment. In order to reap these benefits, significant hurdles must be overcome. When using wind farms as large-scale renewable energy sources to generate electricity, a key problem is that the availability of wind is of stochastic nature. In Figure 1, measurements of the wind speed are depicted in the form of a time series over one month. Given the changing wind speeds and the strong dependence of the power generation capability on the wind speed, it is obvious that the stochastic form of power output poses problems in terms of the large-scale integration of renewable energy sources into the electricity infrastructure. Customers expect electric power to be available at their convenience rather than being a function of the wind speed.

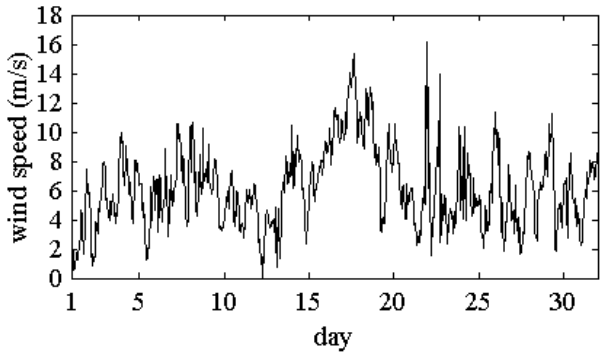

Figure 1: Example wind speed measurements over one month

As a solution to this problem, stochastic energy source access management and integration through a hybrid combination with a hydrogen plant is proposed. Elements of the concept are illustrated in Figure 2. It comprises the hydrogen system composed of the fuel cell, electrolyser and storage tanks, as well as the renewable energy source, power electronic circuits, and a management and control unit. The elements are interconnected through a Direct Current (DC) bus over which the power exchanges can be managed efficiently. The renewable energy source is here assumed to be a wind farm. The wind farm with stochastic power output is transformed into an emission-free deterministic electricity generation facility with controlled power output to the grid and the possibility of hydrogen production.

The electric power P_{ss} coming from the three-phase AC generator is due to the stochastic source. The AC quantities are converted into DC quantities by means of an AC-DC current sourced converter. In order to enable the deterministic supply of active power P_{ds} to the grid, the parallel connection to fuel cell and electrolyser is established. With this parallel connection the hydrogen based electric power P_{hy} is exchanged. Given that losses are neglected, the following relationship is valid:

$$P_{ds} = P_{ss} + P_{hy} .$$

In the case when the active power P_{ds}, which the system is expected to deliver to the grid, is lower than P_{ss}, then $P_{hy} < 0$. In this operating mode, DC power is transmitted to the electrolyser. In the electrolyser hydrogen is generated using wind as a clean energy source. It is then stored in the hydrogen tank. In the case when the active power P_{ds} exceeds P_{ss}, then the wind speed is not high enough to provide P_{ds}. In this case the difference $P_{hy} > 0$ is delivered by the fuel cell.

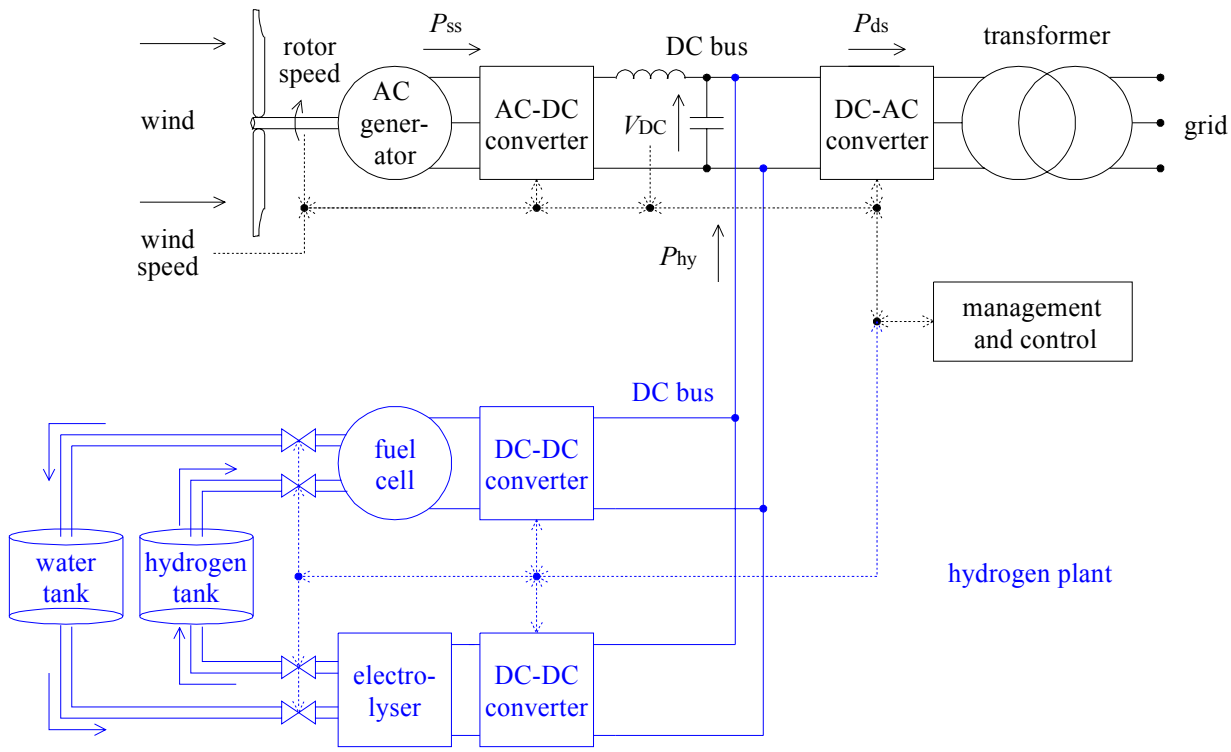

Figure 2: Elements of DC bus connected hybrid combination of stochastic source and hydrogen plant

The concept brings together wind energy conversion and fuel cell technology such that their respective strengths are combined in a synergetic manner. This is particularly interesting in the context of the hydrogen economy.