Coupled Flow and Reactivity in Variably Saturated Porous Media

Carl D. Palmer*, Earl D. Mattson,

(Idaho National Engineering and Environmental Laboratory)

Robert W. Smith

University of Idaho, Idaho Falls

May 6-7, 3003

Project Funded by EMSP Program

INEEL

Idaho National Engineering & Environmental Laboratory

Motivation

- Vadose-zone contamination can be a continuing source for groundwater contaminant plumes.
- Travel time in vadose zone important to risk assessment.
- Contaminant removal from vadose zone is technically difficult.
- Cleanup expected to account for half of total cost of subsurface remediation at DOE facilities.

Moisture-Dependent Reactivity Hypothesis

The reactivity of variably-saturated porous media is dependent on the moisture content of the medium and can be represented by a relatively simple function applicable over a range of scales, contaminants and media.

Wetted Surface Area

$$A_W = A_{total} \cdot f(S) = A_{total} \frac{S}{S + K_W(1 - S)}$$

Reactive Surface Area

$$A_R = A_{total} \cdot f(S) = A_{total} \frac{S}{S + K_R(1 - S)}$$

$K_d(S)$

$$K_d(S) = \frac{Q_{eq}}{1 + Q_{eq}[B]} \cdot \frac{\alpha_s \Gamma}{\rho} \cdot \frac{S}{S + K_R(1 - S)}$$

$$K_d(S) = K_d(S = 1) * K_{d,rel}(S)$$

Relative K_d

$$K_{d,rel}(S) \approx \frac{S}{S + K_R(1 - S)}$$

Small-Scale Verification?

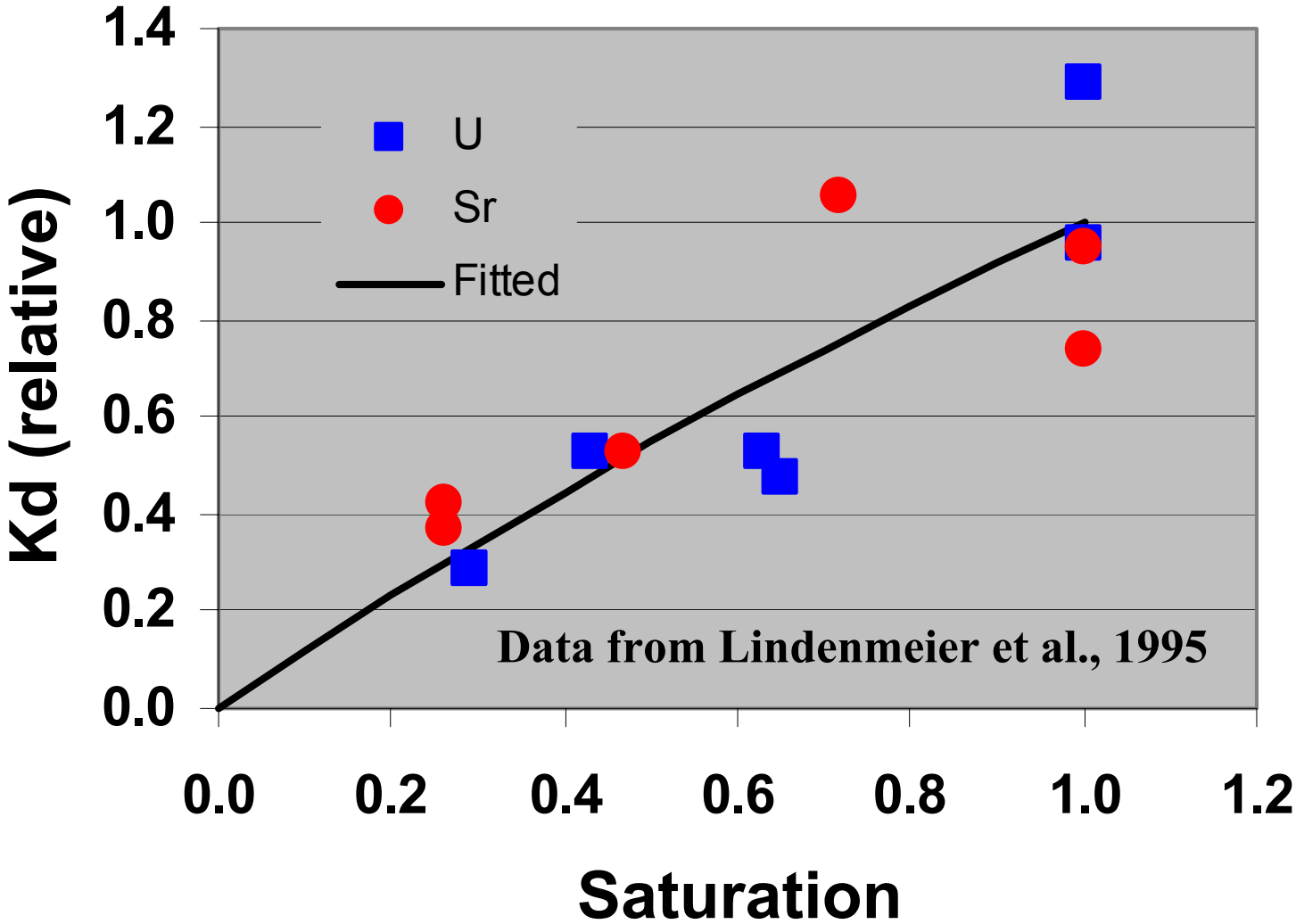

Larger-Scale Verification?

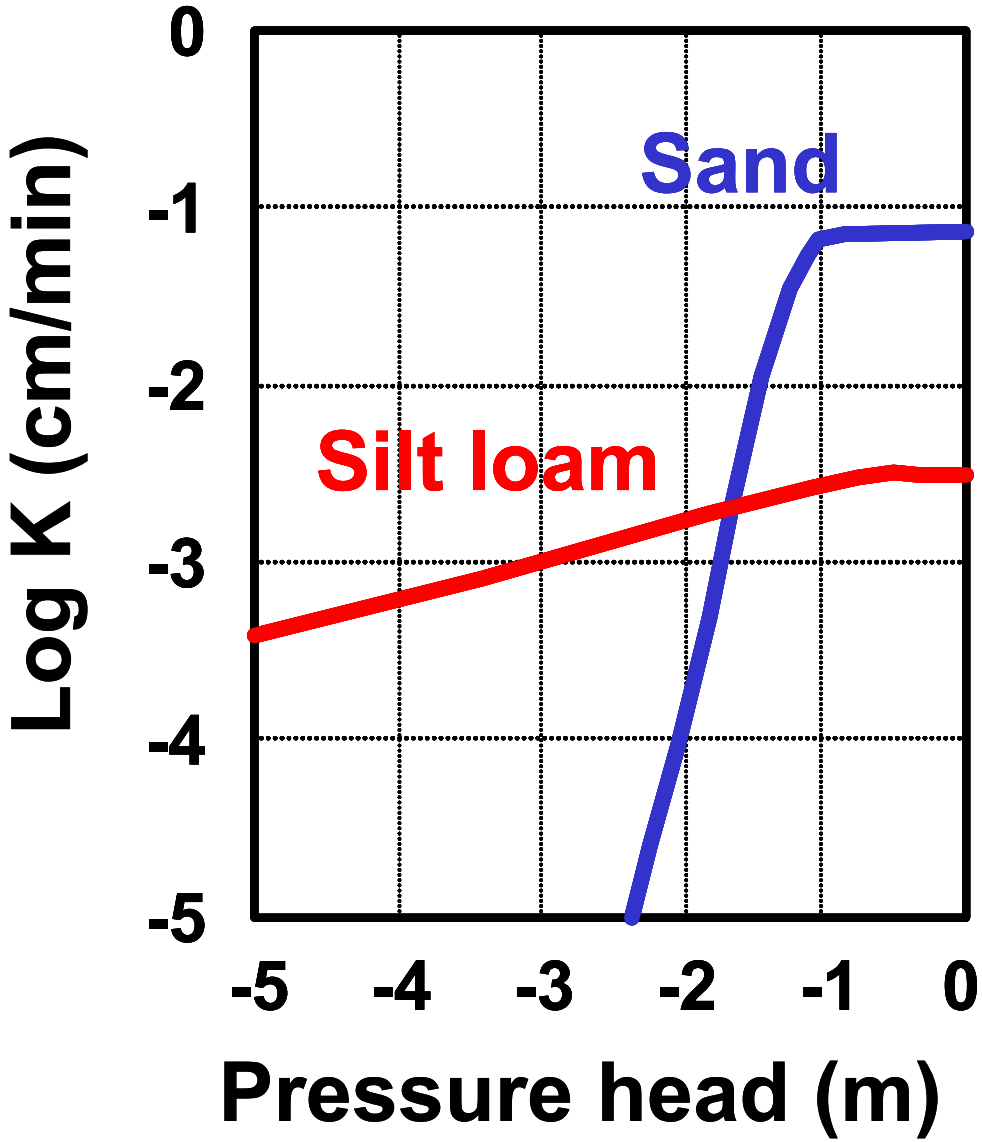

Research Questions

- What is the relationship between moisture content and reactivity?
- Can the relationship between moisture content and reactivity be separated into a "reaction term" and a "medium term"?
- Can the average reactivity of heterogeneous medium comprised of two or more distinct materials be estimated from the properties of those materials?

Research Questions

- Can the same general functional relationship between moisture content and reactivity obtained from small heterogeneities be applied to larger-scale heterogeneities and if so, how do the parameters scale?

- Does the reactivity of heterogeneous media comprised of two or more distinct materials exhibit anisotropic behavior and does the degree of anisotropy change as a function of moisture content?

Research Questions

- Are the reactivity/moisture content relationships obtained for idealized heterogeneous systems applicable to actual heterogeneous materials?

Experimental Methods

- One-Dimensional Experiments
  - Ostensibly homogeneous systems
  - Test materials to be used in 2D experiments
  - Use existing UFA -- or 2m Geocentrifuge
  - Use conservative (Cl^-) and reactive (Sr^{2+}, Zn^{2+},F^-)
  - Obtain θ-ψ relationships
  - Obtain K-θ relationships
  - Obtain BTCs and determine reactivity- moisture content relationships

Experimental Methods

- Two-Dimensional Experiments with idealized heterogeneities
  - Obviously heterogeneous systems
  - Use conservative (Cl^-) and reactive (Sr^{2+}, F^-)
  - Use two-meter centrifuge

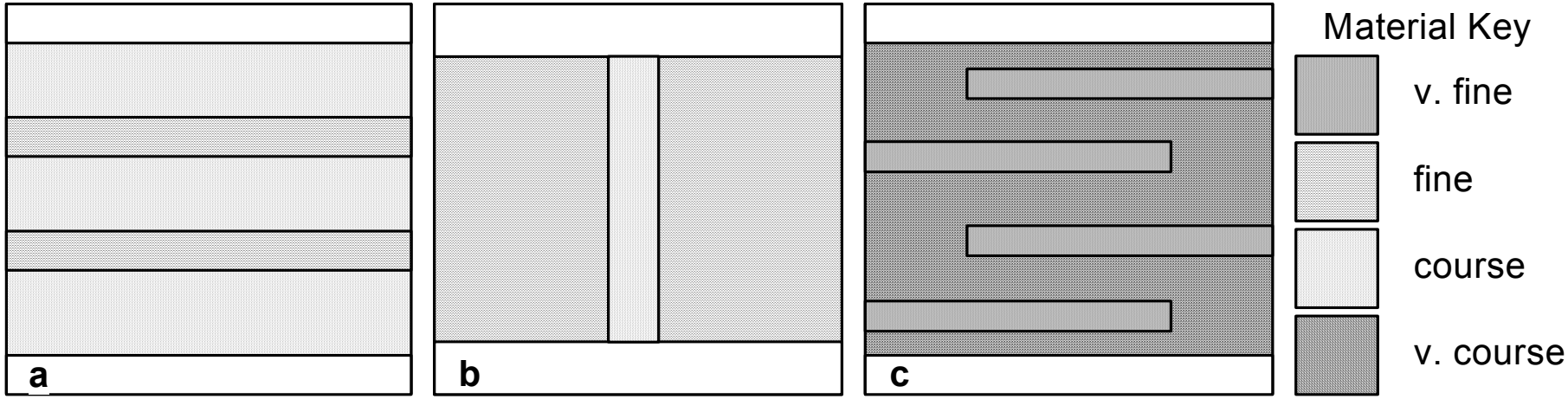

Experimental Methods

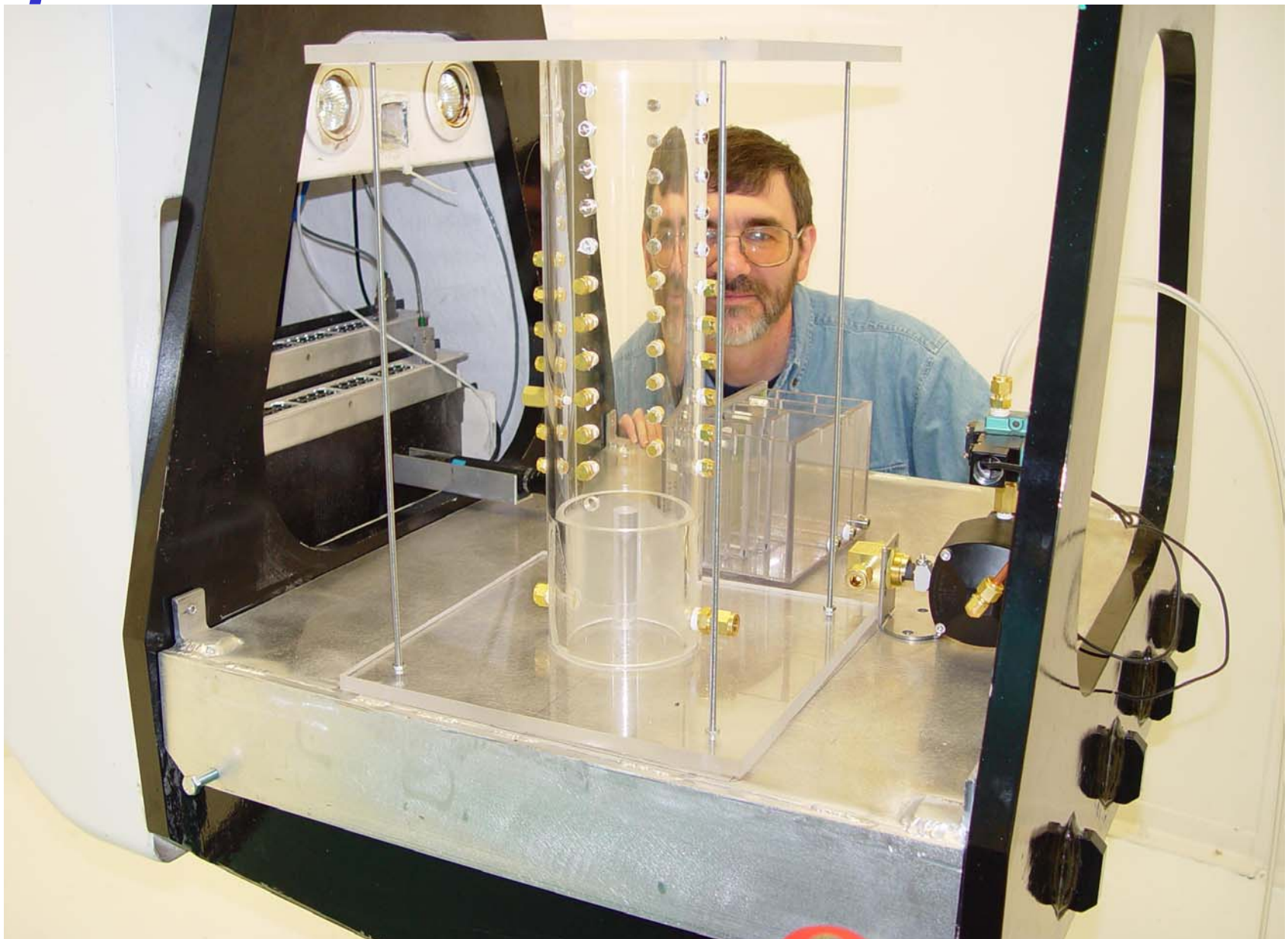

Data Analysis

- Moment analysis
- CXTFIT (Toride et al., 1995)
- HYDRUS-1D (Modified by J. Simunek)
- HYDRUS-2D (Modified by J. Simunek)

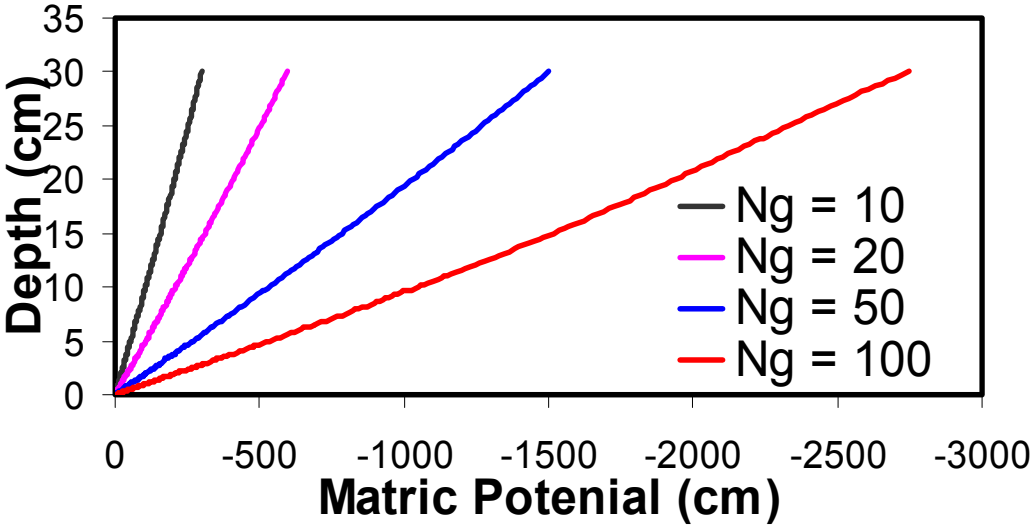

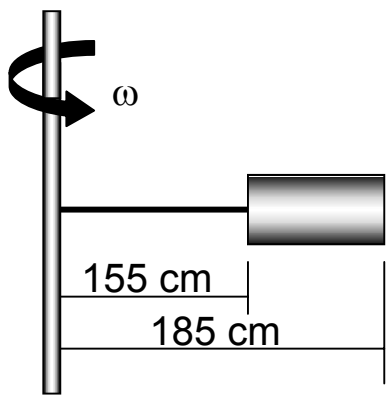

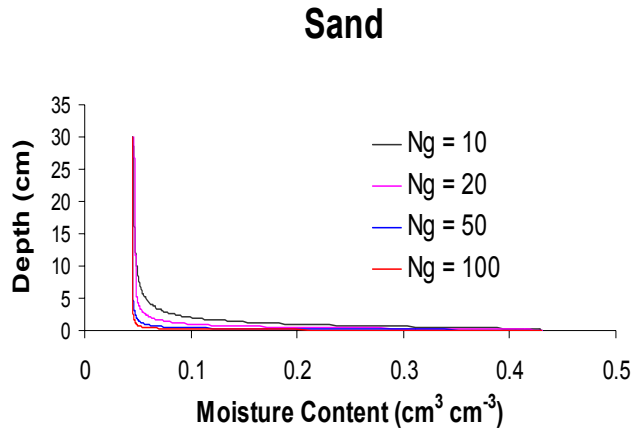

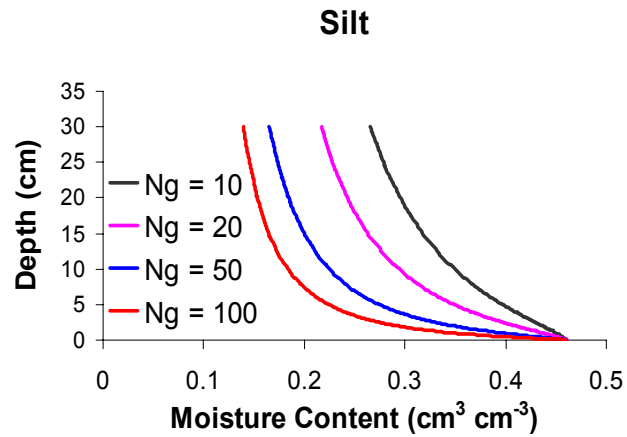

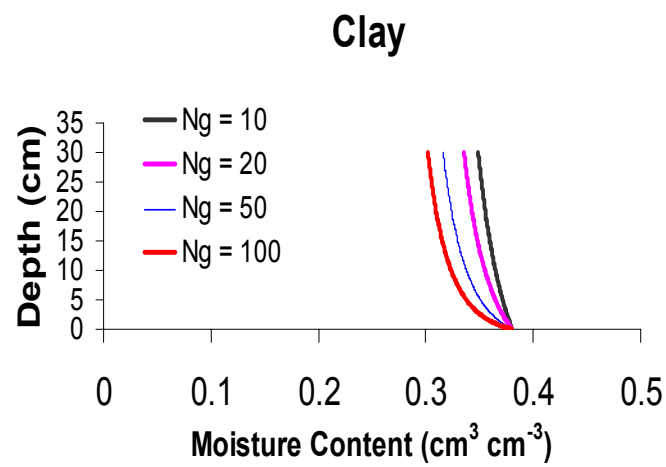

Boundary Conditions

Upper $q = 0$

Lower $\psi = 0$

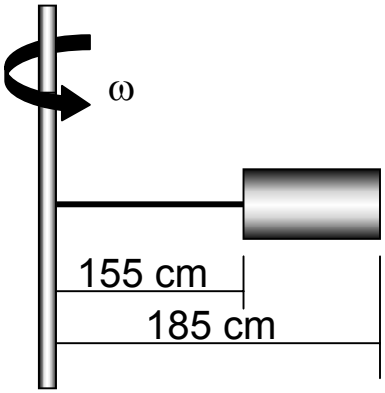

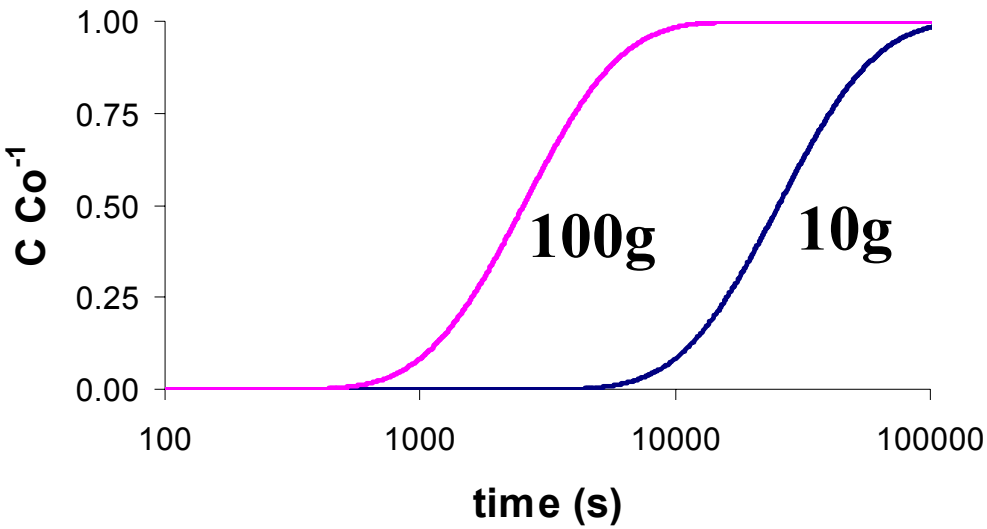

Acceleration: 10 g

Acceleration 100 g

Boundary Conditions

Upper $q = 10^{-4}$ cm s^{-1}

Lower $\psi = 0$

Upper $q = 10^{-3}$ cm s^{-1}

Lower $\psi = 0$

Silt, theta ~26%

Darcy's Law in Unsaturated Soil

$$q = -K(h)\left(\frac{dh}{dz} - \frac{dz}{dz}\right)$$

$$q = -K^{*}(\psi)\left(\frac{d\psi}{dr} - \rho\omega^{2}r\right)$$

Note: neglects hysteresis
steady flow
centrifuge neglects gravity component

Theory

- Work to move parcel of water from r_0 to r_1:

$$W_1 = m\int_{r_0}^{r_1} a_c\,dr = m\omega^2\int_{r_0}^{r_1} r\,dr = \frac{m\omega^2}{2}\left(r_1^2 - r_0^2\right)$$

- Work to accelerate parcel from 0 to v:

$$W_2 = mv^2/2$$

- Work to raise fluid pressure from p_0 to p:

$$W_3 = m\int_{p_0}^{p_1} \frac{V}{m}\,dp = m\int_{p_0}^{p_1} \frac{dp}{\rho}$$

Theory

Mechanical energy per unit mass or "fluid Potential", ϕ, is

$$\phi = \frac{W_1 + W_2 + W_3}{m}$$

$$\phi = \frac{W_1 + W_2 + W_3}{m} = \frac{\omega^2}{2}\left(r_1^2 - r_0^2\right) + \frac{v^2}{2} + \int_{p_0}^{p_1} \frac{dp}{\rho}$$

Theory

$$q = -\frac{k\rho}{\mu}\frac{d\phi}{dr}$$

$$q = -\frac{k\rho}{2\mu}\omega^2\frac{d\left(h^2\right)}{dr} = -K^*\omega^2\frac{d\left(h^2\right)}{dr}$$

Summary

- The centrifuge advantage
  - faster (* N)
  - wider range of moisture
- The disadvantage
  - capital equipment costs
  - non-traditional experimental techniques
    - $\theta = f(\mathbf{r}, \omega)$
    - acceleration effects on instruments

Summary (continued)

- ***Development of new numerical tools is necessary***
  - ***HYDRUS (1-D) with Jirka Simunek***
  - ***HYDRUS (2-D) with Jirka Simunek***

- ***Theory should be reviewed***