Project Number 70267
A Hybrid Hydrologic-Geophysical Inverse Technique for the Assessment and Method for Characterizing Flow and Transport Processes Monitoring of Leachates within the Vadose Zone

Douglas LaBrecque
Multi-Phase Technologies LLC

David Alumbaugh
Department of Civil and Environmental Engineering
University of Wisconsin-Madison

James Brainard
Geohydrology Department
Sandia National Laboratories

T.-C. Jim Yeh
Department of Hydrology and Water Resources
University of Arizona

Project Goals

- Improve our understanding of transport modes including the influence of natural. heterogeneities and man-made structures within the vadose zone at DOE sites.
- Improve the tools used to understand and monitor vadose zone transport.

Approach

- Analyze flow and transport in the vadose in mid-scale experiment to characterize an in-situ transport process
- Deploy and Improve Tools Vadose Zone Monitoring
  - 3-D Electrical Resistivity Tomography (ERT)
  - Cross-Borehole Radar (XGPR)
  - Dense Arrays of Neutron Access Holes, Tensiometers, Suction Lysimeters, and TDR probes
  - 3-D Hydrological Inverse Modeling and Simulation
  - 3-D Anisotropic Electrical Resistivity Inversion
  - Improved Methods of Moisture Content Estimation from XGPR and ERT

STVZ Site Instrument Layout

- Two-Nested Tensiometers Suction Lysimeter, and TDR Locations: The Tensiometers are installed at 3.5 and 6 meters below the ground surface with a suction lysimeter and TDR probe installed just below each tensiometer
- Four-Nested Tensiometers, Suction Lysimeter and TDR Locations: Tensiometers are located at 2, 4, 6, and 8 meters below the ground surface. A suction lysimeter and TDR probe are installed just below the 8 meter deep tensiometer.
- PVC Cased Wells: Used for down-hole measurements (XBGPR, Neutron, Gamma, and electrical inductance). Wells are installed to a depth of 13 meters.
- ERT Vertical Electrode Strings: Electrodes are installed at 0.75 meter intervals to a depth of 13 meters.
- ERT Surface Electrodes
- Continuous Core Sample Locations
- Cells with Tracer

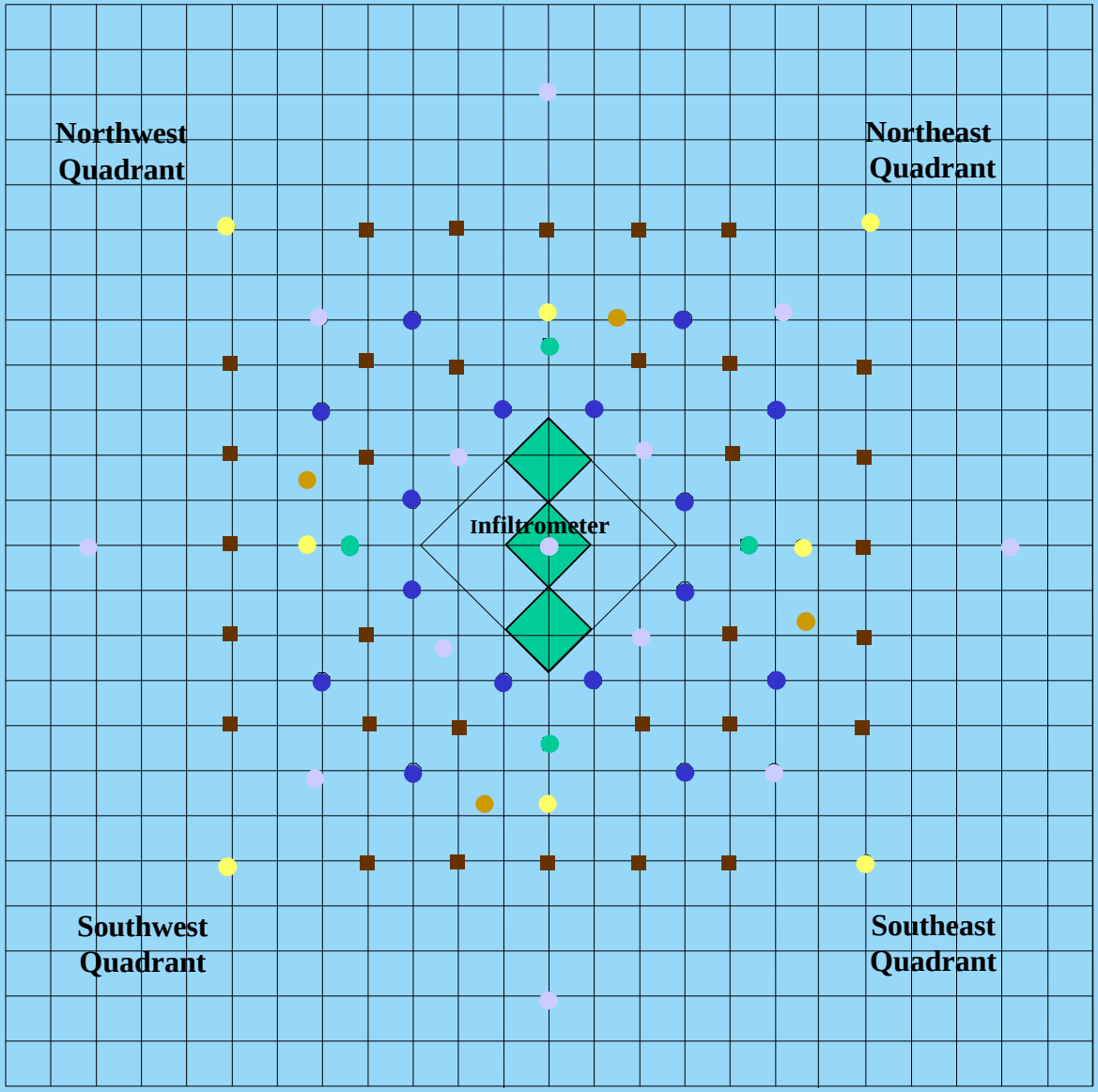

3m
Scale

N

Groundwater Electrical Conductivity From Suction Lysimeters

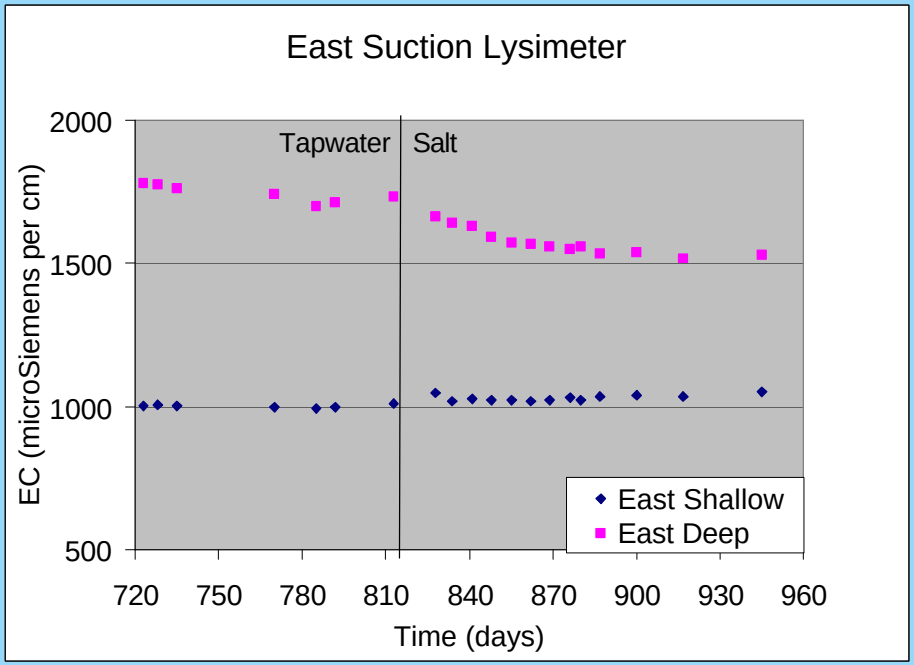

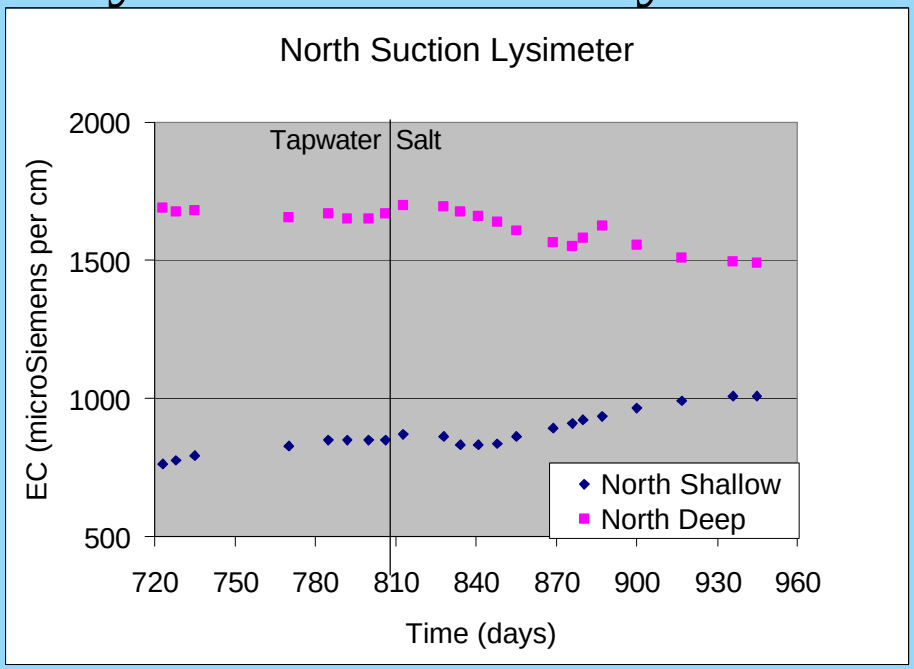

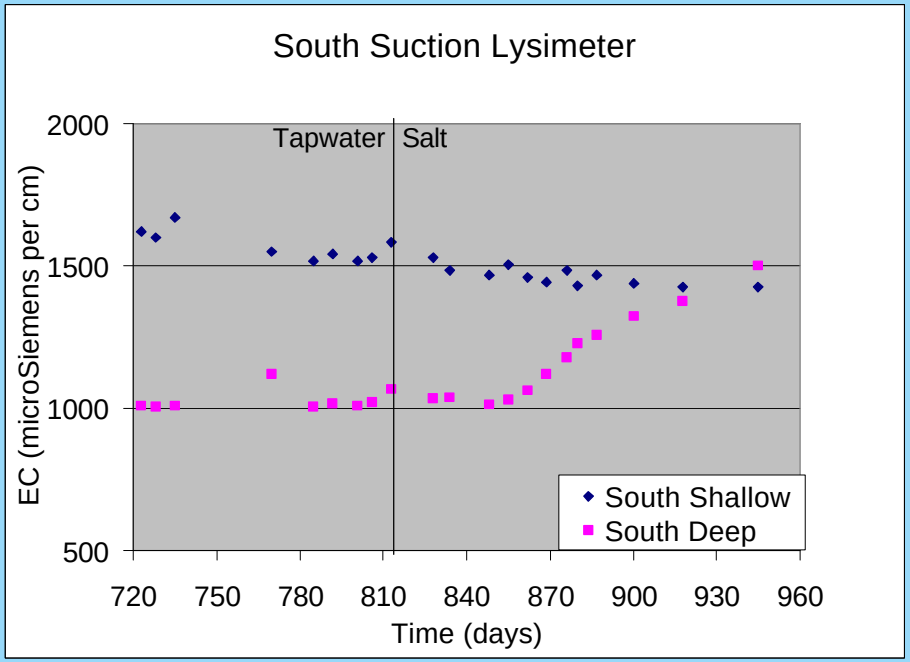

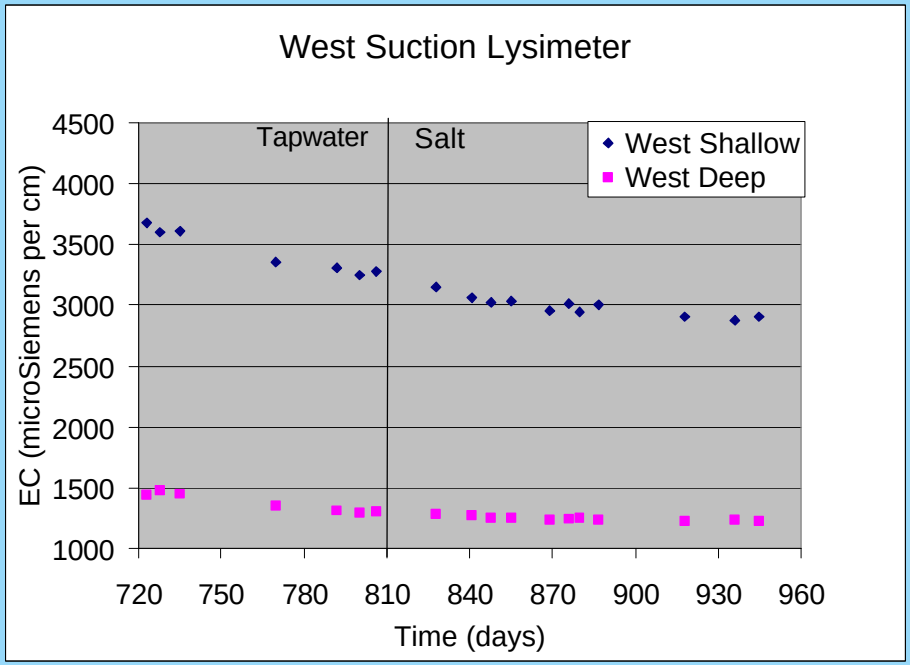

Percent Change in Conductivity (4 Days)

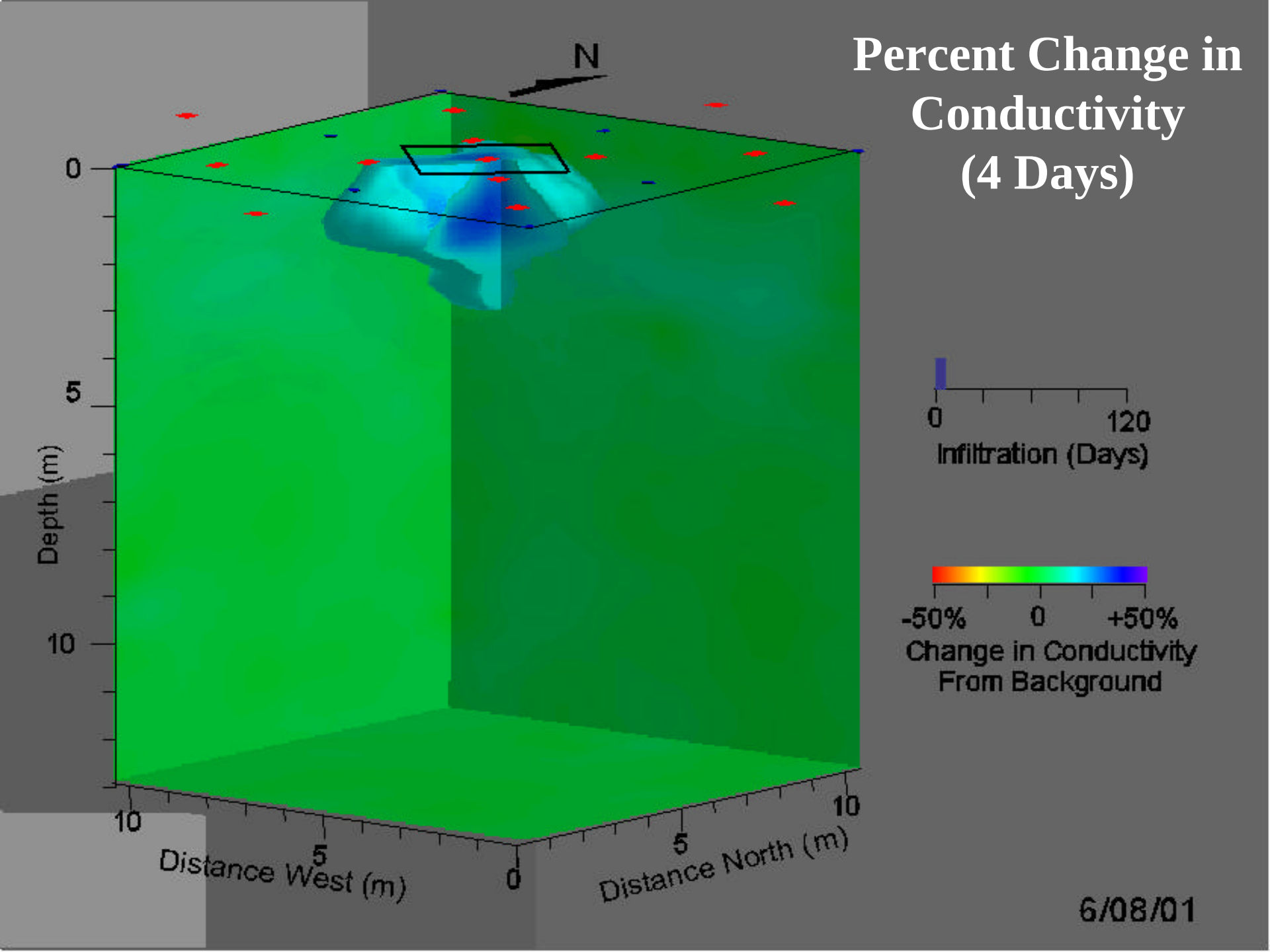

Percent Change in Conductivity (18 Days)

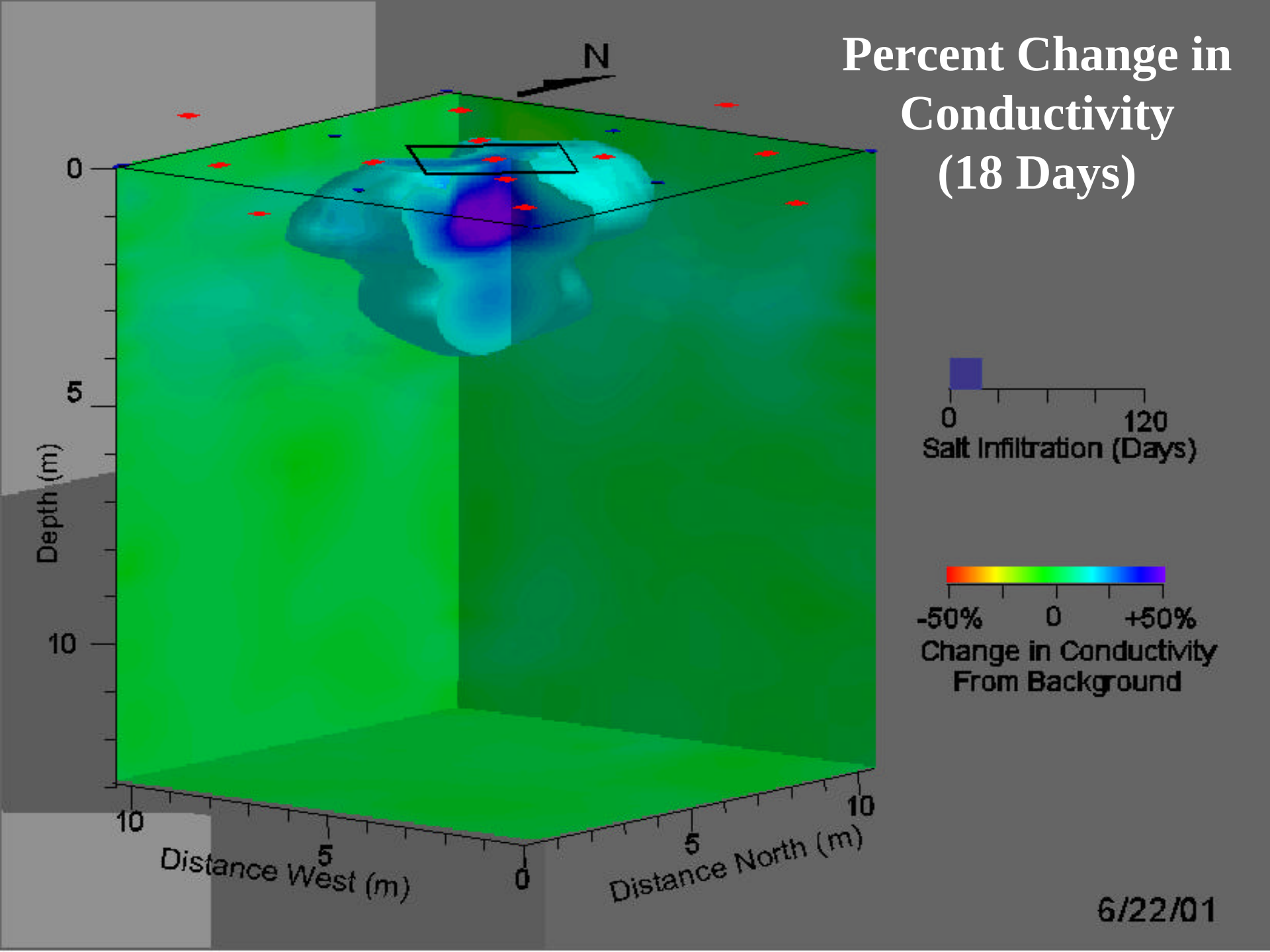

Percent Change in Conductivity (28 Days)

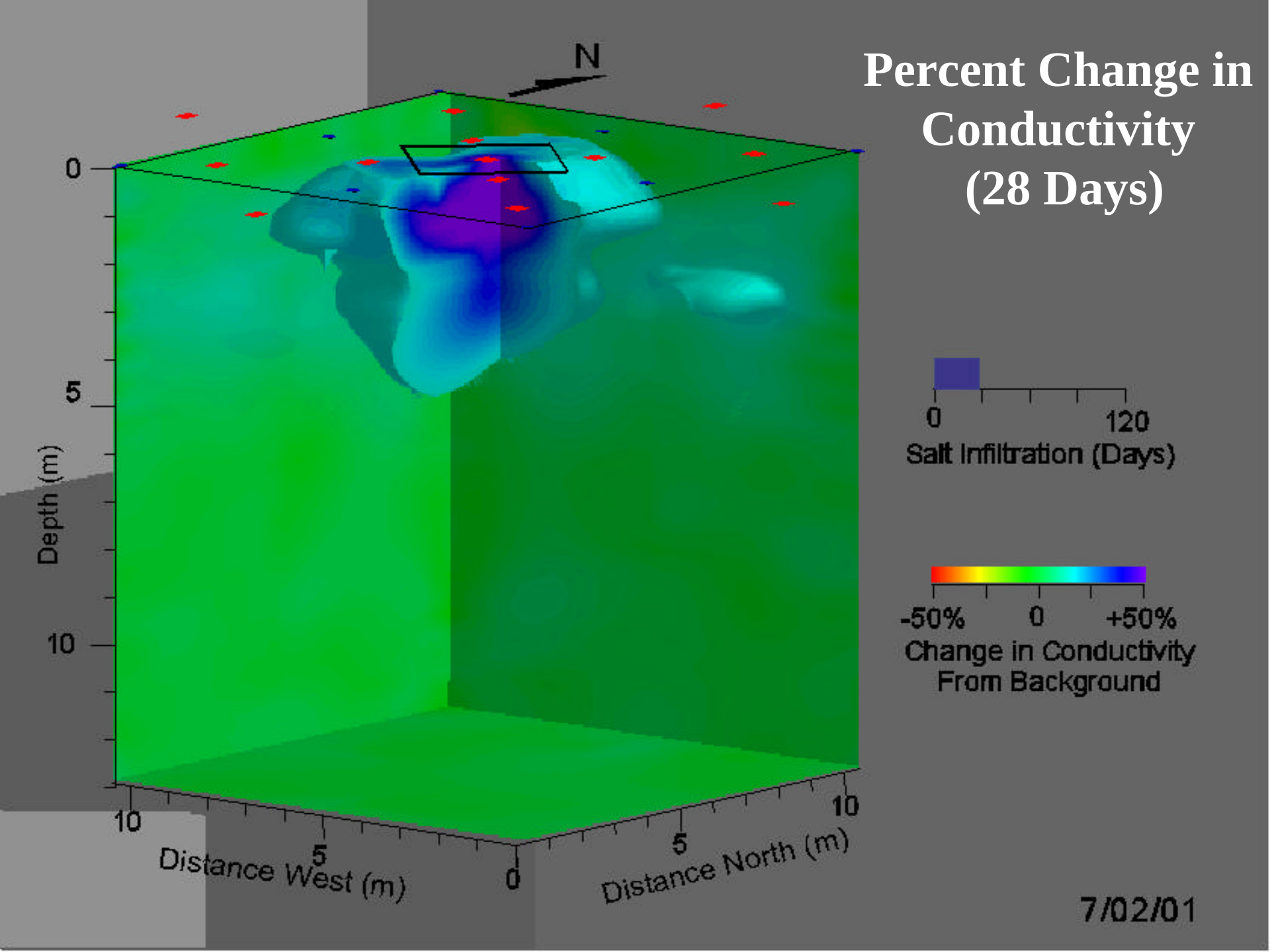

Percent Change in Conductivity (46 Days)

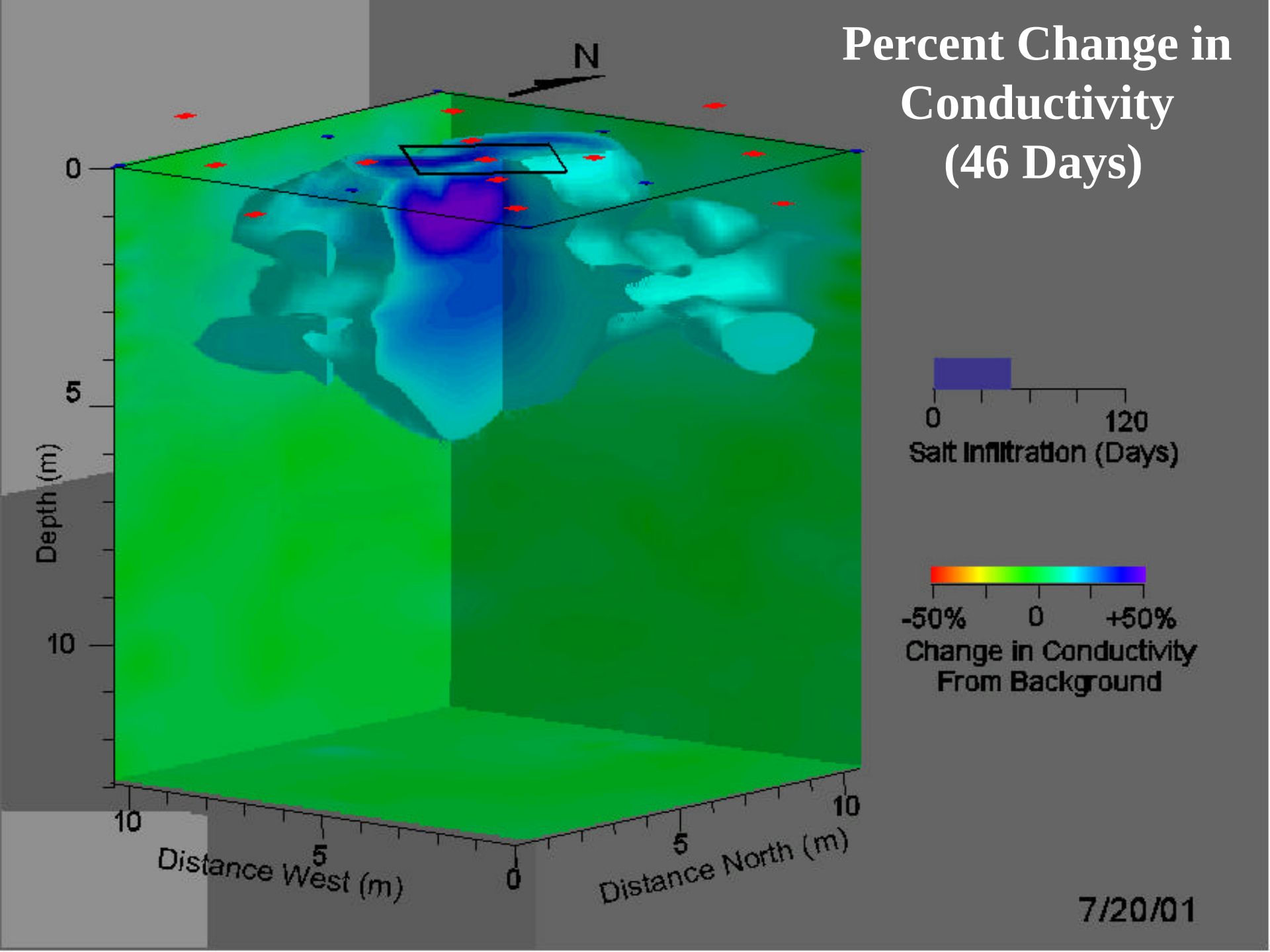

Percent Change in Conductivity (92 Days)

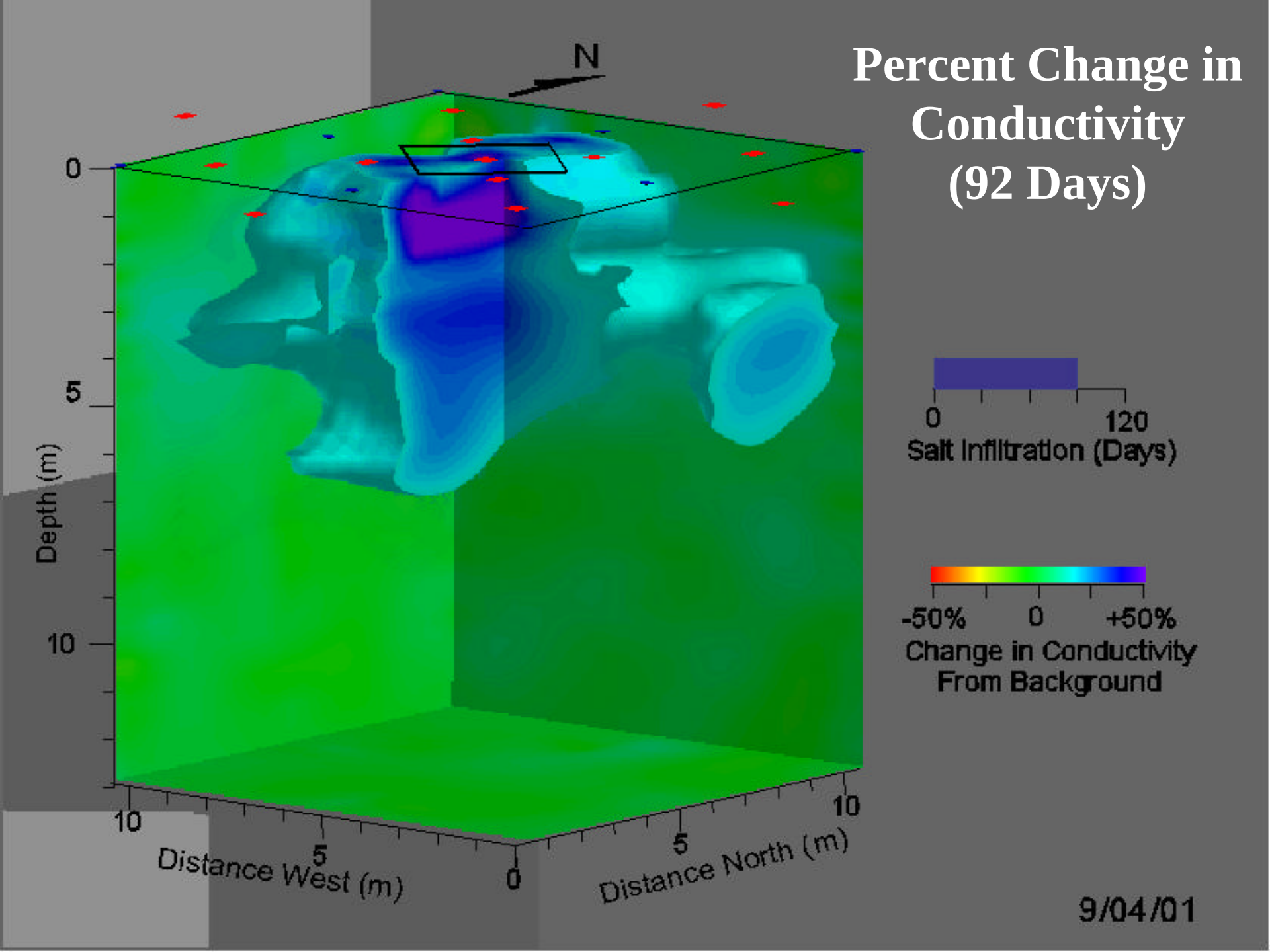

Percent Change in Conductivity (115 Days)

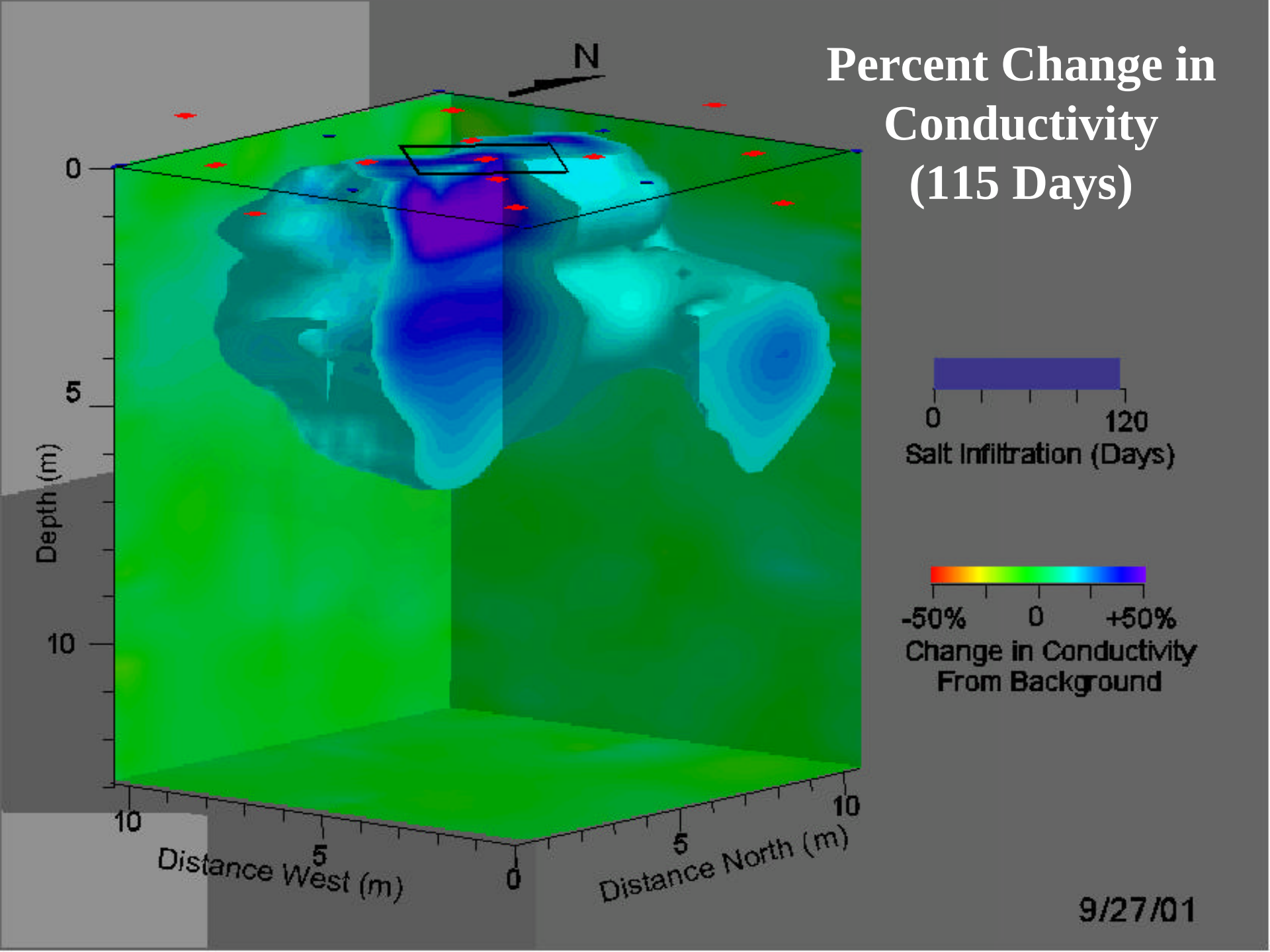

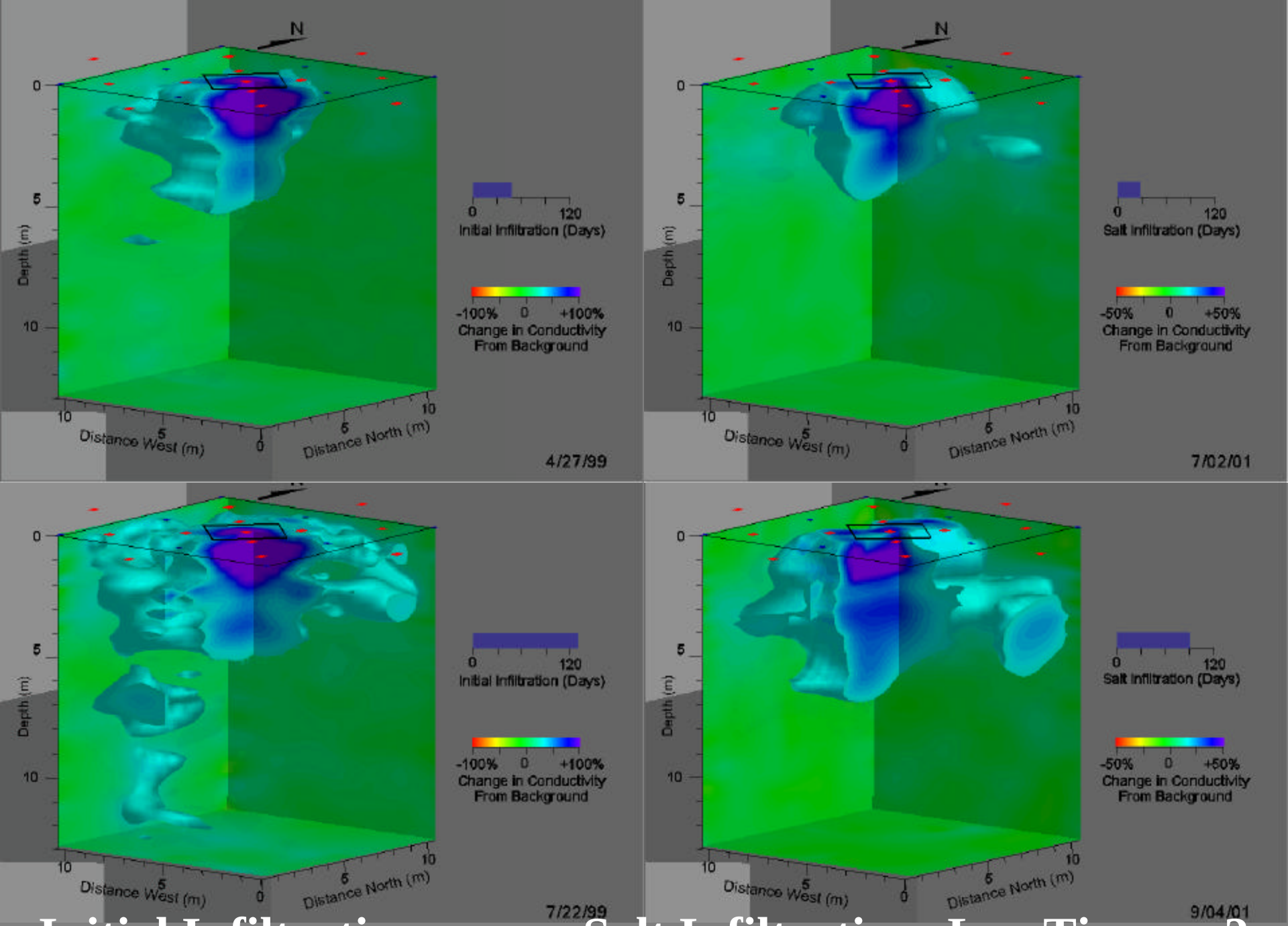

Initial Infiltration versus Salt Infiltration: Lag Times x 2

Hydrological Simulation of Salt Front

simulated pressure head distribution
using estimated hydraulic parameters at 138 days

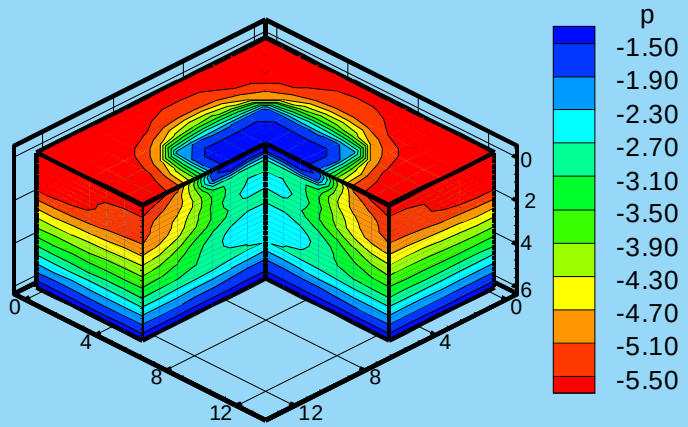

simulated water content distribution
using estimated hydraulic parameters at 138 days

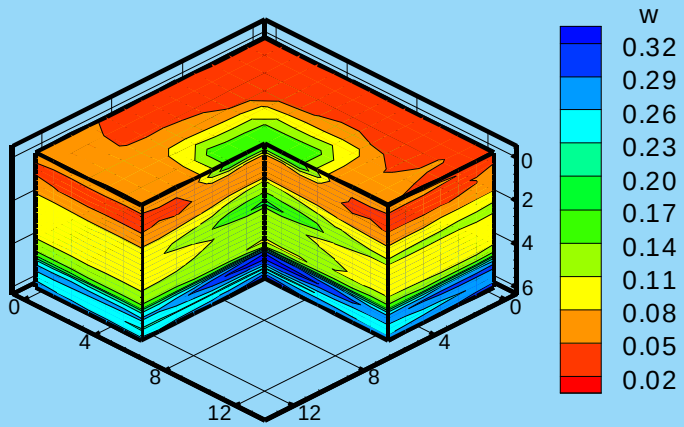

concentration distribution
at 20 days after concentration input

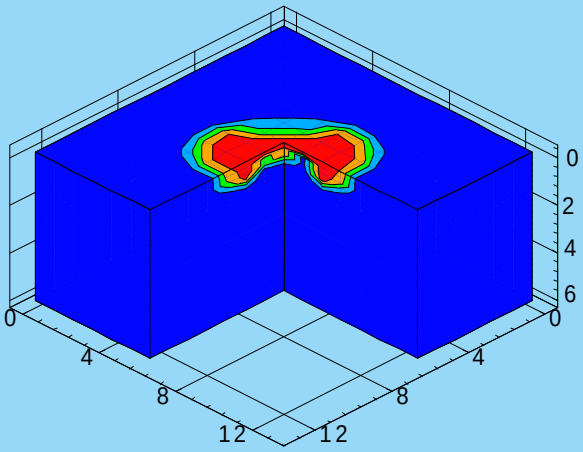

concentration distribution
at 40 days after concentration input

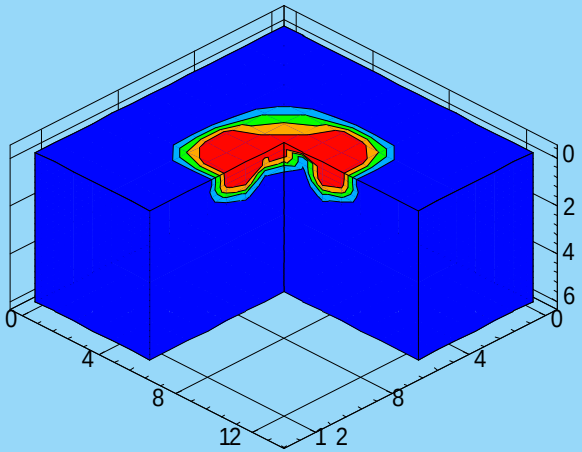

concentration distribution
at 80 days after concentration input

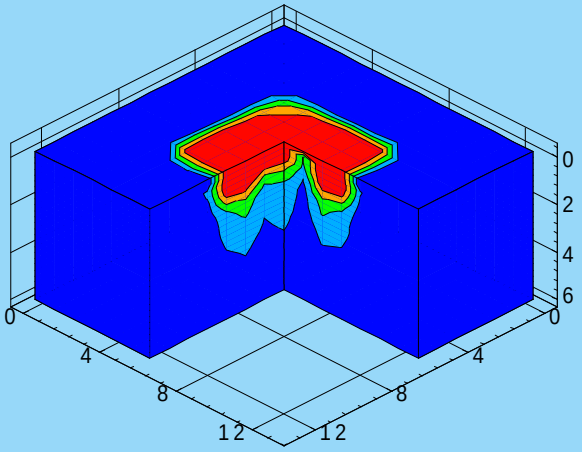

XGPR Results:

Pre-Infiltration Water Content and Attenuation

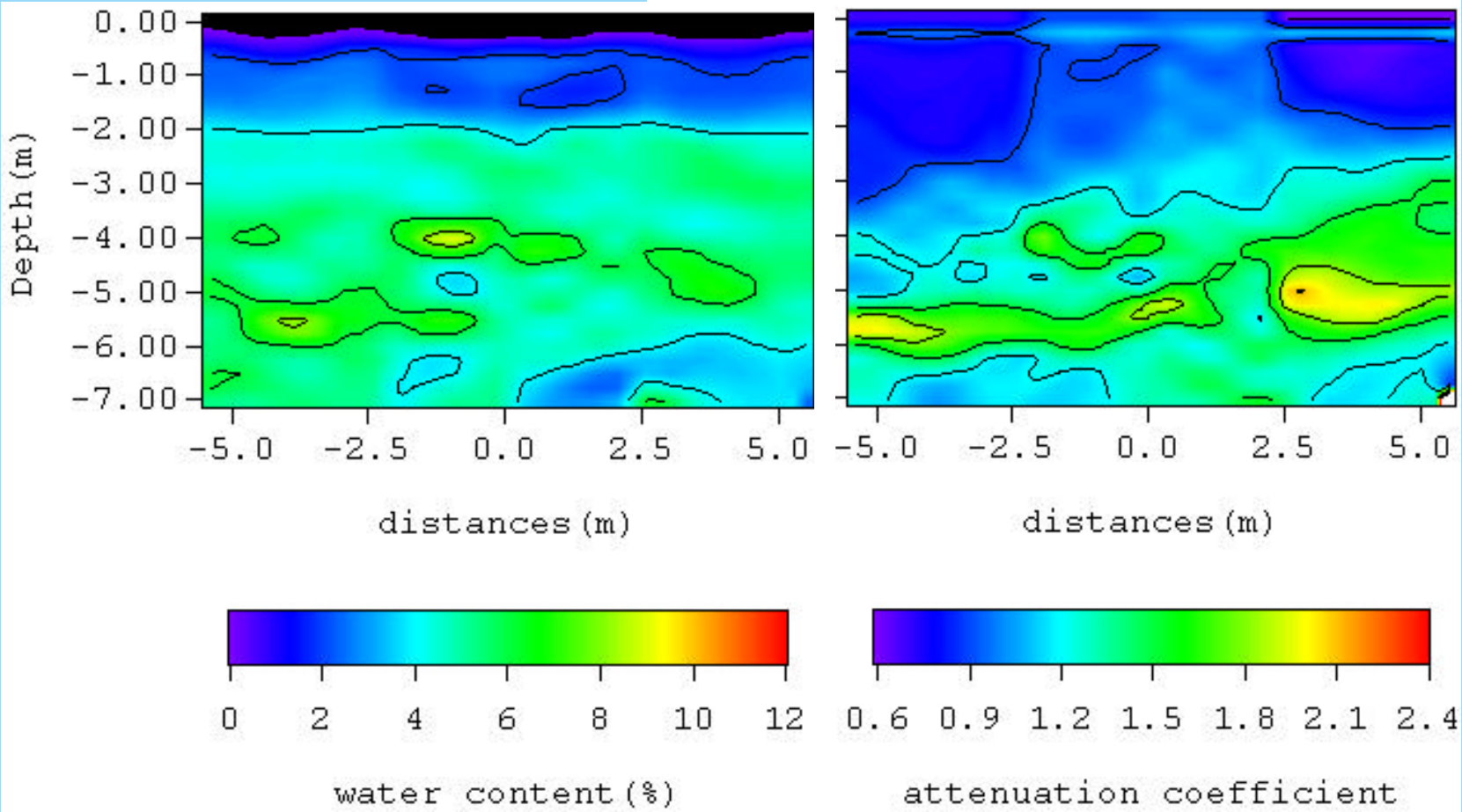

XGPR Results: Comparing Post-Infiltration Pre-Salt to Post Salt Moisture Content and Attentuation

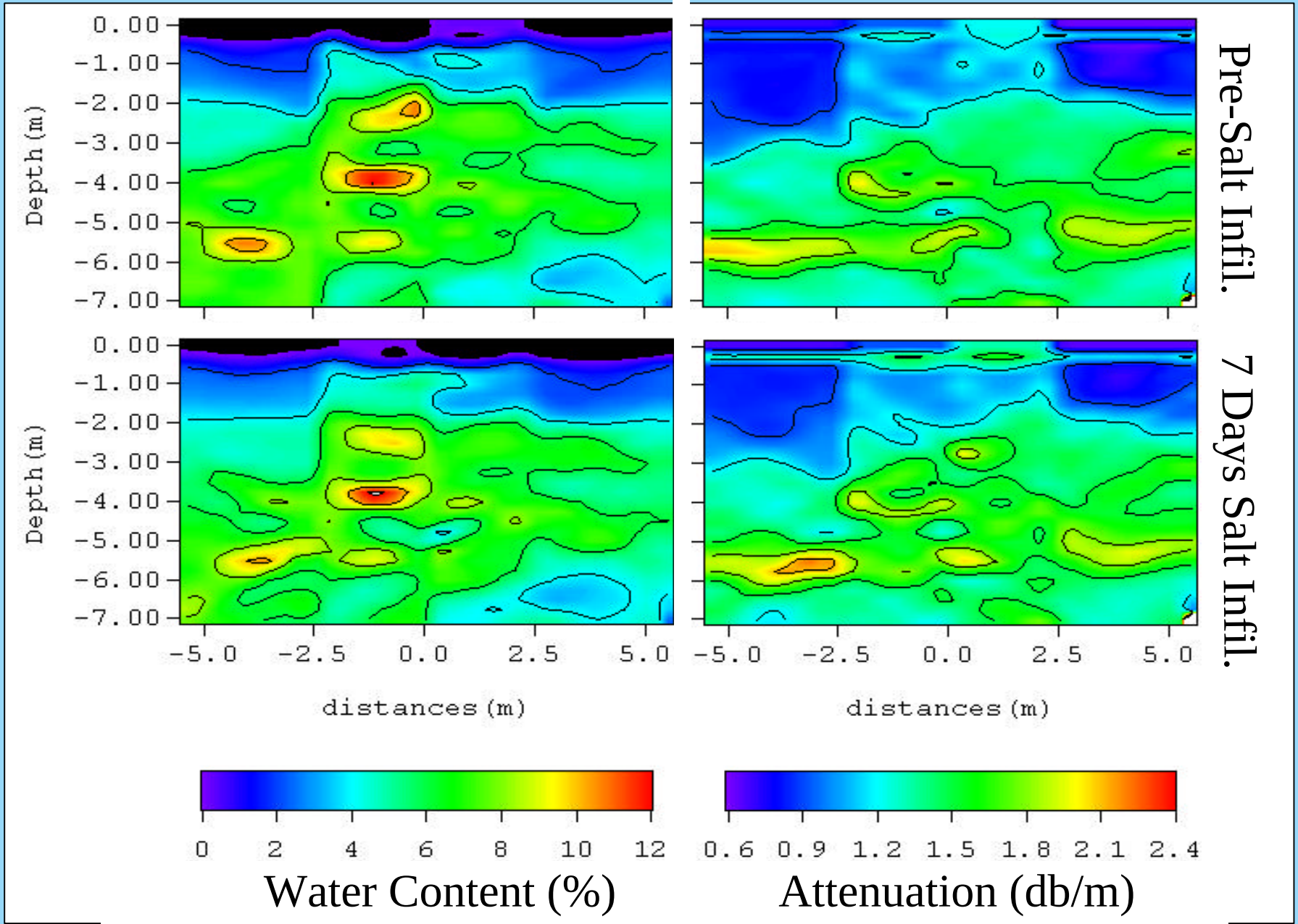

Future Work

- Complete Processing ERT and XGPR data
- Infiltration at Increased Salt Content, Possibly Using a Different Infiltration Pattern
- Improve Moisture Content Estimation Methods, Test Interference by Salinity Effects
- Examine XGPR Attenuation Using Synthetic Models and More Field Data
- Compare Hydrological Simulations With Field Results