Abstract No. 600 PNNL-SA-32548

Life-Cycle Cost Analysis for Developing and Deploying a Representative Accelerator Transmutation of Waste System

M. R. Shay
R. I. Smith
S. M. Short
D. B. Shipler
C. S. Ehrman[(a)]
T. J. Myers[(b)]

January 2000

Prepared for
the U.S. Department of Energy
under Contract DE-AC06-76RLO 1830

Pacific Northwest National Laboratory
Richland, Washington 99352

(a) Consultant
(b) Advanced Energy Systems, Inc.

ABSTRACT

A rapid deployment scenario and a possible schedule have been defined for performing the necessary research, development, demonstration (RD&D), and deployment of a system using high-energy proton accelerators to transmute long-lived radioactive transuranic elements into less hazardous materials and generate electricity as a byproduct. The term for this process is Accelerator Transmutation of Waste (ATW). RD&D activities would begin in the year 2000 and would continue until about 2027. Operation of full-sized production facilities would begin in 2028 and would continue until about 2117 at a series of eight ATW stations. They would be put into service at approximately 2-year intervals with each station operating for about 60 years. During this time, the expected inventory of commercial spent nuclear fuel would be treated through the ATW system.

The estimated life-cycle cost for the postulated ATW system is about $280 billion over a 117-year period. This total includes about $2 billion for R&D, about $9 billion for demonstration activities, and about $268 billion for system deployment and implementation. All costs are expressed in undiscounted 1999 dollars. Depending upon the sale price obtained, revenue from the byproduct electricity could offset a large proportion of these costs.

INTRODUCTION

This paper provides a summary of life-cycle cost information generated in response to a Congressional request that DOE study ATW technology. This request included an estimate of the potential life-cycle capital and operating costs associated with developing and implementing a full-scale ATW system capable of treating all civilian spent nuclear fuel. The estimates developed for R&D activities, demonstration facilities and activities, capital and operating costs, and the electricity revenues for the deployed system are presented in constant January 1999 dollars. Also presented is an analysis of the uncertainties associated with the estimated costs for each major cost element and the calculated probabilities that total system costs will not exceed a certain amount. Detailed analyses are presented in the appendixes prepared by PNNL (1) to support the report to Congress by DOE (2).

The estimated life-cycle costs in this paper are based on a scenario designed to develop and deploy an ATW system capable of completing its mission at the earliest reasonable time, that is, a rapid-deployment or deployment-driven scenario. Much of the early R&D effort contains parallel investigations of system parameters and processes to obtain sufficient information to make system design decisions early enough to allow near-term system deployment. As a result, the first 5 years of the R&D activities in the deployment-driven scenario rapidly prepare for large component testing and process development in the hot cells, as discussed in the four Technical Working Groups' reports (3-6).

The reference deployed system would consist of eight ATW stations. Each station would consist of two high-energy accelerators and four power blocks (each block containing two sub-critical reactors [transmuters] and a turbine generator). The stations also would include a light water reactor (LWR) spent fuel processing function, an ATW fuel fabricating function, and an ATW spent fuel processing and recycling function. The accelerators provide a high-energy beam of protons that impinge upon spallation targets located at the center of each transmuter. This action generates the high-energy neutrons that

transmute the transuranic elements by fission, yielding the thermal energy used to drive the turbine generators.

The LWR spent fuel processing function separates the uranium, transuranics, and fission products present in the spent nuclear fuel (SNF). It then prepares the uranium for disposal as low-level waste (LLW), prepares the extracted transuranic elements for fabrication into ATW fuel assemblies; and treats/packages the separated fission products and the activated LWR fuel assembly hardware for disposal in the geologic repository. The ATW fuel fabrication function constructs fuel assemblies and target assemblies for the ATW transmuters using the separated transuranics, technetium, and iodine from the LWR and ATW processing functions. The ATW processing and recycling function processes the spent ATW fuel and recycles the extracted transuranics back to the ATW fuel fabricating function. At this point, they are mixed with fresh transuranic feed material from the LWR processing function and fabricated into new ATW fuel assemblies. The extracted technetium and iodine materials are recycled into target assemblies to be irradiated in the transmuters; the separated fission products and fuel assembly hardware are prepared for disposal.

The proposed system would need eight production stations that would be brought into service at approximately 2-year intervals. Each station would operate for 60 years to consume the inventory of civilian SNF (86,317 tonnes) that is presently forecast.

ATW SYSTEM SCENARIO AND SCHEDULE

The total system is proposed to begin with government funding and to be phased into a private funding and management system when the RD&D phases of the program are complete. The key phases of the program are 1) Government-Supported Phase (2000 to 2027) through demonstration, and 2) the Privatization Phase (2023 to 2117 and beyond).

The deployment scenarios for the first ATW station (part of which includes demonstration efforts) and for deployment of the subsequent production stations are illustrated in Figure 1. The primary units used in Figure 1 are MWe (megawatt electric) and MWt (megawatt thermal). On the left-hand side of the figure, DEMO 1st PHASE illustrates the configuration for the start of the first accelerator and transmuter, where the heat generated in the transmuter is dissipated in a dump heat exchanger. Unneeded proton beam power is dissipated in a beam stop. Also during that first phase, some LWR fuel is processed (UREX), fuel for the first transmuter is prepared (PYRO A), and discharged ATW fuel is processed (PYRO B) in hot cells at existing DOE national laboratory facilities. The DEMO 2nd PHASE illustrates the accelerator upgraded to full beam power, with one full-power transmuter, the addition of the steam generator and turbine-generator systems, and additional beam stops for the three beams not used. By this time, the fuel cycle facilities at Station 1 are operational at the level required to supply the first transmuter. First-of-a-kind (FOAK) POWER BLOCK 1 illustrates the addition of the second transmuter and its steam generator to the system. Thus, the first complete power block is created, now using two of the four available accelerator beams and producing about 620 MWe. The fuel cycle facilities are in full production, preparing fuel for existing and future transmuters. The FOAK POWER BLOCK 1 and FOAK POWER BLOCK 2 illustrate the addition of the second power block to Station 1. The Nth-of-a-

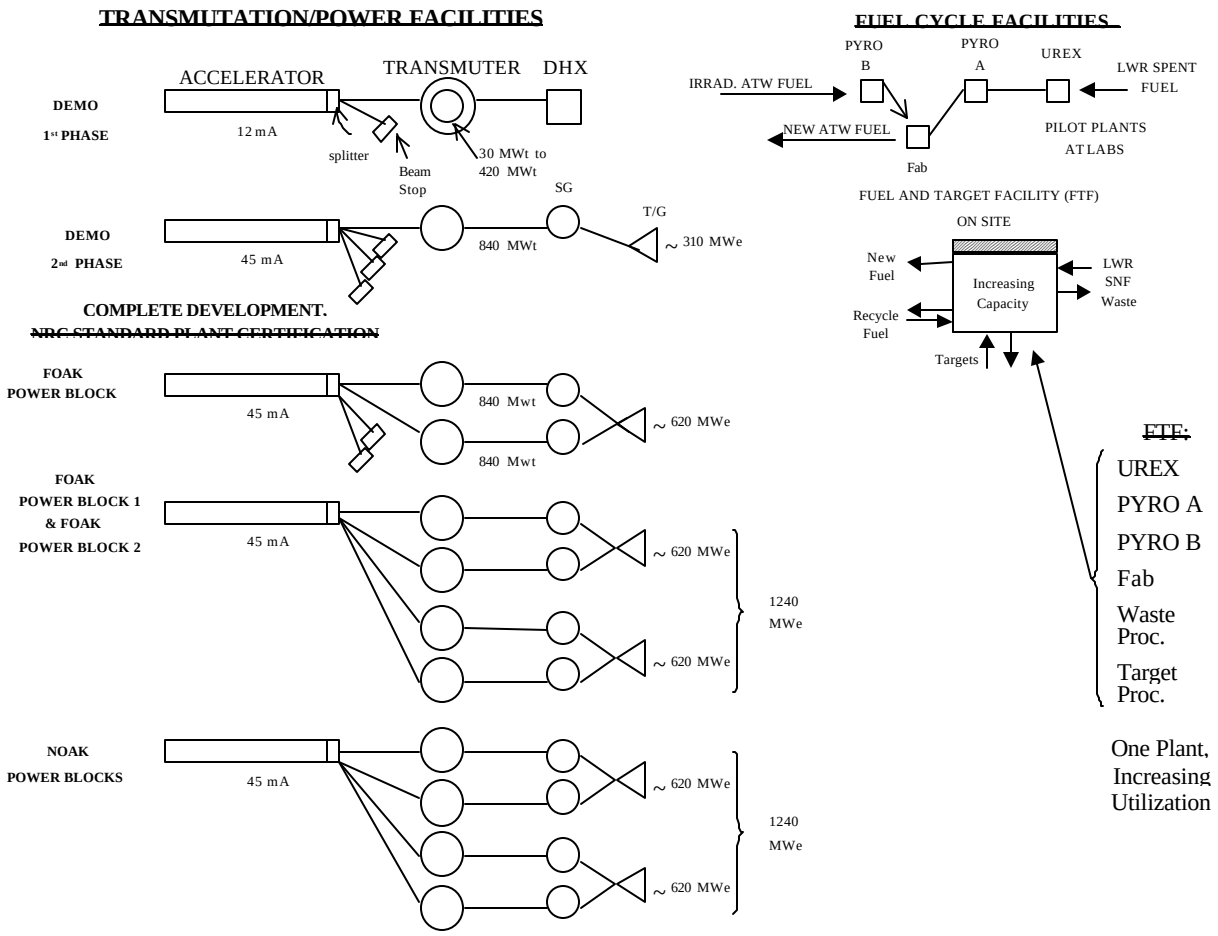

Fig.1. ATW Phased Configurations at the First ATW Station

kind (NOAK) POWER BLOCKS illustrate the addition of the second accelerator and power blocks 3 and 4 to Station 1, completing Station 1 construction.

Research and Development Costs

The major technical areas examined were Target/Blanket (spallation target, fuel development, heat removal systems), Accelerators (beam switching, operational reliability), Separations (LWR aqueous processing, transuranic separations, ATW separations), and System Integration (overall integration of the research programs).

Spallation target assemblies would be tested using high-energy protons from the Los Alamos Neutron Science Center (LANSCE) accelerator at Los Alamos National Laboratory to demonstrate neutron yields and dispersion for different target materials and also target-cooling technology.

ESTIMATED ATW PROGRAM COSTS

The estimated costs for the planned rapid deployment ATW reference system are summarized in Table I in undiscounted 1999 dollars.

Table I. Summary of Estimated Undiscounted ATW System Life-Cycle Costs (1999 dollars in billions)

System Element	R&D	Demo	Implementation			Total
			Capital	Operating	D&D	
Accelerators	0.17	2.5	11.2	44.4	0.6	58.9
Transmuters	1.03	2.1	30.2	49.4	3.1	85.8
Separations	0.50	2.2	9.0	40.5	1.0	53.2
ATW Fuel Fabrication	--	0.6	2.1	40.7	0.2	43.6
Site Support	--	1.0	1.0	30.6	0.1	32.7
Retrieve/Transport/Dispose	--	0.1	--	4.2	--	4.3
Integration	0.07	0.9	--	--	--	0.9
Subtotals	1.77	9.4	53.5	209.8	5.0	280.0

Pilot-scale fuel development for ATW would be performed initially in existing hot cells at Argonne National Laboratory-West (ANL-W) with test fuel irradiated in available fast reactors. Initial fuel for the 30 MWt, 420 MWt, and 840 MWt loadings in the first transmuter will be fabricated in the Argonne hot cell pilot fuel preparation facilities. Fuel for subsequent loadings will be fabricated in the Fuel and Target Facility at Station 1. Some demonstration effort is expected in the heat removal area.

The aqueous and pyrometallurgical methods for spent fuel processing would be performed at pilot scale in existing hot cell facilities at ANL-W and at the demonstration level in the first full-sized facility to be constructed at the site of the first ATW station.

The total costs for the R&D phase of the program are summarized by program element in Table II.

Table II. Total R&D Program Costs (1999 dollars in millions)

Program Elements	Time Periods			
	2000-2005	2006-2008	2009-2027	Total
Target/Blanket	387	226	416	1029
Accelerator	114	28	23	165
Separations	189	80	229	498
System Integration	33	13	28	74
Total	723	347	696	1766

Demonstration Facility Costs

A full-sized accelerator would be constructed to serve the initial sub-critical reactor (transmuter) that would be constructed full-size also, but initially fueled for low-power operation (~30 MWt). Subsequently, the core size of the transmuter would be increased, using two steps to reach power levels of

420 MWt and 840 MWt. A turbine-generator system would be constructed to serve the first transmuter when it reaches the 420-MWt power level. A second full-sized transmuter would be constructed. When this transmuter is connected with the turbine generator, the first transmuter, and the first accelerator, they would form the first power block on the first station.

The total costs for the program demonstration phase are summarized by program element in Table III.

Table III. Total ATW Demonstration Costs (1999 dollars in millions)

Program Elements	Time Periods			
	2000-2005	**2006-2008**	**2009-2027**	**Total**
Target/Blanket	0	56	2080	2136
Accelerator	42	383	2055	2480
Separations	3	31	2255	2289
Fuel Fabrication	0	0	620	620
System Integration	148	111	615	874
Site Support	4	29	948	981
Total	197	610	8573	9380

Full Scale Deployed System Life-Cycle Costs

The ATW stations are postulated to be on *green field* sites (7). The site-support facilities in this paper do not include such items as the turbine generators and their heat rejection systems, or the main electrical switchyard for delivering future generated electricity to the local power grid.

Where possible, the methodology for estimating construction and operating costs for the various facilities was based on existing design studies for facilities with functions the same as or very similar to those required in the proposed ATW system. Because the capacities of the original facility designs were sometimes different than the capacities needed for the ATW system, the original costs were adjusted using the ratio of capacities raised to the 0.6 power.

Because some of the existing studies were performed earlier, it was necessary to escalate some of the adjusted costs for facility design, construction, and operating and maintenance (O&M) to January 1999 dollars using DOE historical escalation data for nuclear and energy research facilities.[(a)] In addition, because the proposed system would contain many units of each facility type (16 accelerators, 32 power blocks, 8 LWR processing/ATW fuel processing/ATW fuel fabricating and recycling plants), significant cost savings were assumed possible due to learning experiences on the initial units. For the power blocks, the first and second transmuter units on the first station were assumed to be the FOAK. Power Block 2 of Station 1 was also assumed to be the first of a kind. Power Blocks 3 and 4 of Station 1 and all subsequent power blocks were assumed to be NOAK. The design and construction costs for Power Blocks 3, and 4

[(a)] From the Department of Energy, January 1999 Update, Departmental Price Change Index, FY 2001 Guidance. Anticipated Escalation Rates, DOE Construction Projects and Operating Expenses.

and all subsequent power blocks were reduced using 95 percent learning curve factors, as suggested in the ORNL report on cost estimate guidelines (8). Other system unit costs (except for the accelerators) also were reduced from the initial unit cost using 95 percent learning curve factors. The accelerator units costs were reduced using 85 percent learning curve factors for construction costs. Design costs for the first units of the first ATW station were reduced by using learning curve factors to estimate the costs for subsequent units on that station and for subsequent stations. Design costs for subsequent units were reduced a 0.15 factor (85 percent). Those later site-related design costs were also further reduced using 95 percent learning curve factors.

The O&M costs for the second and subsequent units were not reduced using learning curves because the potential for any significant O&M cost reductions from learning was assumed small. The O&M costs at the LWR and ATW fuel fabrication and recycle facilities were presumed proportional to the numbers of LWR SNF assemblies processed, new ATW fuel assemblies fabricated, and ATW assemblies processed each year.

The decommissioning costs for each radioactive unit on an ATW station were projected to be 10 percent of the unreduced unit construction costs, in the dollars of the same year, based on previous studies of LWR power station decommissioning (9). Similarly, the decommissioning costs for nonradioactive units at an ATW station were postulated to be 5 percent of the unreduced unit construction costs, also in the dollars for the same year. In addition, these estimated decommissioning costs were reduced using 95 percent learning curve factors for subsequent units decommissioned.

The estimated costs for system components presented in the following subsections are *base costs*, that is, costs for the initial units of a given component. The base costs are those prior to application of any of the learning curve or other reduction factors that were applied to subsequent units of that system component to adjust for mature designs and learning experiences during construction and decommissioning. In addition, estimates were developed for the costs of retrieval and transport of SNF and for transport/disposal of repository-destined wastes generated during the LWR and ATW system processes. Such estimates were based on information developed for DOE/RW-0510 (10) and DOE/RW-0508 (11). For wastes destined for LLW disposal, the costs were derived from a 1998 NRC report (12).

Base costs for the accelerator would be calculated differently. The initial accelerator would be built at the site of the first ATW station and operate at a beam current of about 12 MA for about 7 years in the RD&D activities to improve on-line accelerator reliability. This activity also would provide protons to drive the initial configurations of the first transmuter (at power levels ranging from 30 MWt to 420 MWt). At the end of the initial 7 years of operation, the accelerator would be upgraded to operate with a beam current of about 45 MA. This beam current would be sufficient to drive two power blocks (four transmuters) at full power or 840 MWt each.

The estimated cost of such accelerators to drive the transmuters was derived from the cost estimates developed for the Accelerator Production of Tritium (APT) program (13). Those estimates underwent several independent cost reviews and provide a well-founded basis for estimating the cost of the ATW accelerators. The detailed ATW accelerators cost estimates from the APT costs are summarized in Table IV.

The cost of decommissioning the nonradioactive accelerator systems was estimated at 5 percent of the unreduced construction cost of the unit, in dollars from the same year, and was subject to the 95 percent learning curve factor.

The estimated costs for design, construction, and operation for the ATW transmuters (sub-critical reactors) are based on information presented in the study cited (7). The ATW transmuter for this study was designed to be essentially the same physical size and to produce the same amount of energy as the ALMR reactors. This design thereby permits much of the cost information developed for the ALMR reactors to be used almost directly in estimating the costs for an ATW transmuter.

Table IV. Estimated Base Costs for Elements of the Accelerator System
(1999 dollars in millions)

3rd and Subsequent Units	**Cost Element**	**First Accelerator**	**Second Accelerator**
164	Design	425	164
1079	Construction	1251	1079
--	Upgrade	60	--
44 @ 45 MA	O&M	61 @12 MA	44 @45 MA
54	D&D	63	54

The estimated costs for the initial individual transmuters and associated site-support functions are summarized in Table V. These base values were entered into a spreadsheet that modeled the demonstration and deployment phases of the life-cycle for all system stations.

Table V. Estimated Transmuter Base Design, Construction, D&D, and O&M Costs
(1999 dollars in millions)

Cost Element	**1st and 2nd Transmuters** (FOAK)	**1st Turbine Generator** (FOAK)	**1st Station Site Support** (FOAK)	**1st Power Block** (FOAK)	(NOAK)	**Station Site Support** (NOAK)
Base Design	74.0	39.2	17.5	144.8	123.8	16.3
Construction	655.7	352.5	157.5	1304.0	1114.6	147.0
D&D	65.6	35.3	7.9	130.4	111.4	7.4
O&M	16.7/yr	10.2/yr	57.6/yr	25.1/yr		57.6/yr

Two types of fuel processing functions, separation and recycle, are part of the ATW system: 1) an LWR separations function processes the SNF assemblies into a transuranic (TRU) stream for ATW fuel, a uranium stream for storage or disposal, a fission product stream for treatment and disposal, and an irradiated metals waste stream for disposal and 2) an ATW recycle function processes irradiated ATW fuel into a TRU stream for recycling into additional ATW fuel, an irradiated metals waste stream for disposal, and a fission product stream for treatment and disposal. Both functions are combined into a

single structure together with the ATW fuel fabrication function at the ATW site. The estimated costs for these functions are presented in the subsequent subsections.

Estimated costs for design, construction, and operation for the LWR processing function are based on information presented in the Technical Working Group (TWG) Separations report cited (4). The base cost data were developed for the initial LWR processing facility used in the demonstration activities and subsequent production activities at Station 1. The facility was expected to process 210 metric tons (tonnes) of uranium-spent nuclear fuel (MTU-SNF) per year. It also was expected to produce 2.19 MT per year of TRU for ATW fuel, 28.2 m^3 of class C uranium oxide for disposal, 7.24 m^3 of metallic waste, and 42.9 m^3 of fission product wastes in a ceramic matrix. Other ATW stations were planned with different processing rates, as needed, to provide sufficient TRU feed material to the ATW fuel fabrication facilities for fueling the power blocks as they came on-line. The processing rates for the various stations are shown in Table VI.

Table VI. Estimated Capacity and Base Costs for LWR Processing
(1999 dollars in millions)

		Program Elements			
Station Number	**Capacity** (MTU-SNF/yr)	**Design**	**Construction**	**D&D**	**O&M Costs/yr**
1	210	73.7	663.6	66.4	56.25
2, 3	685 each	149.9	1348.9	134.9	114.3
4, 5, 6, 7, 8	175 each	66.1	594.8	59.5	50.4

The estimated base costs for design, construction, and operation for the ATW spent fuel processing and recycle function are based on information developed by the TWG Separations report (4) and are displayed in Table VII. A 25 percent contingency is included in the design and construction cost estimates. The ATW spent fuel processing and recycle functions at each production station will continue until about 2 years after shutdown of the last power block on that station.

Table VII. Capacity, Estimated Base Costs, and Figures of Merit for
ATW Spent Fuel Processing and Recycle Functions

Station No.	**Capacity** (MT-TRU/yr) (MT-TRU/life)	**Design** (millions)	**Construc-tion** (millions)	**D&D** (millions)	**O&M Costs** (millions/yr)	**Life-Cycle Cost** (millions)	**10^3 $/kg Processed**
1	6.514, (404.5)	64.2	577.5	57.8	27.6	2918	7.21
8	6.514, (395.4)	8.3	495	49.5	27.6	2302	5.82

Estimated costs of design, construction, and operation for the ATW fuel fabrication function are based on information presented in the cited TWG Separations report (4) and on estimates of O&M costs for the ALMR fuel processing and fabrication plant (14). The data used to develop the cost estimates for ATW fuel fabrication are displayed in Table VIII, together with the calculated figures of merit for the facility. The design and construction estimates include a 25 percent contingency.

The design and construction costs are rough order-of-magnitude estimates based on limited information about fuel fabrication plants around the world and they could easily be larger or smaller. The O&M costs are developed from data (14) for the ALMR fuel fabrication facilities. In the initial years of production, the annual production rates will be significantly lower than those at the equilibrium production of 528 assemblies per year projected for the facilities in the ATW system.

Table VIII. Estimated Capacity, Base Costs, and Figures of Merit for ATW Fuel Fabrication

Capacity (assemblies/yr) (@15.72 kg-TRU/assm.)	**Design** (millions)	**Construc-tion** (millions)	**D&D** (millions)	**Lifetime Proces-sing** (kg-TRU)	**O&M Costs** (millions/yr)	**Life-Cycle Cost** (millions)	**10^3 $/kg Processed**
1056 (14)	55.0	495.0	49.5	---	145.2	---	---
528 (Station 1)	36.3	326.6	32.7	532,520	80.7	5994	11.3
528 (Station 8)	4.2	280.0	28.0	514,610	80.7	1379	2.7

The site-support function for the ATW station primarily comprises those portions of the power block balance of plant not related to the turbine-generator system. Some of the systems and facilities unrelated to the turbine-generator system are: the potable water and service water systems, sanitary water and wastewater collection and treatment systems, site electrical distribution systems, roads and sidewalks, administration buildings, station security structures (such as fencing and electronic surveillance), the nuclear material safeguards systems, and fire protection, emergency response and first-aid facilities. The costs of those support facilities that are peculiar to a given station function (for example, accelerators or fuel processing) are included in the costs of those facilities.

The costs for the site-support function at a station are derived from the ALMR reactor station data (7). The net site-support function costs, thus separated, are given in Table IX.

Table IX. Estimated Base Costs for Site-Support Functions
(1999 dollars in millions)

Station	**Program Elements**			
	Design	**Construction**	**D&D**	**O&M**
1	17.5	157.5	15.6	57.6/y
2 – 8	16.3	147.3	14.7	57.6/y

Retrieval, transport, and disposal costs are those for transporting SNF to the LWR processing function, transporting and disposing of the recovered uranium in a LLW disposal facility, transporting the separated and treated fission products and the irradiated fuel assembly hardware back to the repository where it is re-emplaced, transporting the treated and packaged residual fission products from the ATW station to the repository where they are emplaced, and transporting the irradiated ATW fuel assembly hardware to a LLW disposal facility where it is disposed.

The basic approach relates each of these costs to the quantity of SNF handled in the system. The total quantity of SNF that is determined to be treated within the ATW system (86,317 MTU, as given by DOE [10]) is retrieved and transported to the LWR facility. The cost of these activities for the ATW program is estimated to be $4.3 billion in 1999 dollars.

Application of Adjustment Factors to Base Cost Estimates

The estimated base costs for the ATW station components, presented in the previous section, were put into the system cost model spreadsheet as the estimates for the first (and sometimes the second) unit of each component of the total system. For subsequent units, these initial estimates were adjusted for learning experience by applying learning curve factors. The learning curve factor of 95 percent was applied to NOAK units for design and construction for all units, except NOAK accelerators where an 85 percent learning curve factor was applied to their construction.

The total of estimated costs for design, construction, and decommissioning of each component type in the assumed ATW system is not simply the product of the initial base cost and the number of units in the system, but is the summation of the adjusted costs for each unit of the system

Time Distribution of Total Program Costs and Revenues

The percent totals of the capital cost of a typical production station (Station 4) are transmuters -- 57 percent, accelerators -- 21 percent, ATW fuel fabrication -- 4 percent, separations and recycle -- 16 percent, and site support -- 2 percent. The total capital cost for that station is estimated to be $6.7 billion in undiscounted 1999 dollars.

The percent totals of the operating cost of a typical production station (Station 4) are transmuters -- 24 percent, accelerators -- 22 percent, ATW fuel fabrication -- 20 percent, separations and recycle -- 18 percent, and transport and disposal -- 2 percent. The total life-cycle operating cost for that station is estimated to be $36.7 billion in 1999 dollars.

The percent totals of the deployed system total life-cycle costs (including RD&D activities) are annual operations -- 74 percent, construction -- 18 percent, R&D -- 4 percent, D&D -- 2 percent, design -- 1 percent, and transportation and disposal -- 2 percent. The total life-cycle cost for the deployed system is estimated to be $279.4 billion in 1999 dollars. The principal cost elements in Figure 2 illustrate the time distribution of the total undiscounted ATW program life-cycle costs.

The undiscounted costs and revenues presented here do not reflect the effects of the time value of money on the expenditure and income streams that occur over a period of nearly 117 years. Note also that each of the preceding percent totals may (or may not) add up to 100 percent.

An annual net discount rate of 3 percent was applied to both the cost and revenue streams. The resulting net present values for the systems cost elements and for the electricity revenue stream are summarized in Table X.

Selling the electricity produced by the system over its life-cycle is an important revenue stream. The Electric Power Research Institute (EPRI) estimates a sales price of 43 mills/kWh as the point where nuclear power production is competitive with fossil power production. For further details, refer to the Analysis Results section of this paper.

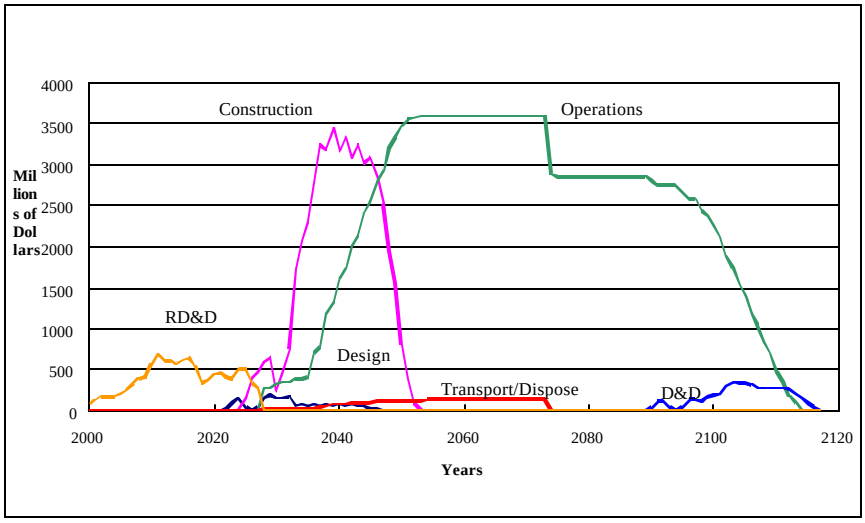

Fig. 2. Time Distribution of Undiscounted System Life-Cycle Costs by Cost Element

Table X. Summary of Estimated Net Present Values of ATW System Life-Cycle Costs
(1999 dollars in billions)

System Element	R&D	Demo	Implementation			Total
			Capital	Operating	D&D	
Accelerators	0.14	1.6	3.5	5.8	0.027	11.1
Transmuters	0.81	1.2	8.9	6.4	0.139	17.5
Separations	0.38	1.3	2.8	7.0	0.042	11.5
ATW Fuel Fabrication	--	0.4	0.6	5.5	0.010	6.5
Site Support	--	0.6	0.3	4.1	0.002	5.0
Retrieve/Transport/Dispose	--	0.04	--	0.8	--	0.8
Integration	0.06	0.6	--	--	--	0.6
Subtotals	1.4	5.7	16.1	29.6	0.2	53.0
Electricity Revenue[1]		0.1		38.1		38.2

[1] At a sale price of 43 mills per kWh.

UNCERTAINTY ANALYSIS

All of the cost elements in the cost analyses presented in the section entitled Estimated ATW Program Costs of this paper are uncertain by varying amounts because the various facilities have not yet been fully engineered and certainly have not yet been constructed or operated. To estimate the magnitudes of these uncertainties and their impact on the ATW system life-cycle cost estimate, a Monte Carlo analysis was performed. The estimated base cost for each unit of each cost element and the upper- and lower-bound estimate for each of those costs were used to form a triangular distribution of estimated costs. These distributions were randomly sampled during each history in the Monte Carlo calculation, with the samples used in the ATW System Cost Model to obtain an estimate for the total system life-cycle costs. This cycle was repeated for 10,000 histories in the Monte Carlo calculation to achieve a satisfactory degree of convergence. The calculation resulted in a density distribution of estimated life-cycle costs that was converted into a probability curve for the estimated system life-cycle cost. As a part of the total system cost estimate calculation, similar probability curves were produced for the estimated cost of each of the principal system cost elements, that is, the component capital and operating costs and the system capital and operating costs.

Methodology

For two components (the first transmuter and the first LWR processing), actual information from analogous facilities (U.S. commercial nuclear stations, THORP LWR reprocessing plant, ALMR processing) was used to establish the range of uncertainty of the cost estimates for those ATW facilities. For the rest of the Station 1 components, an uncertainty range appropriate for a rough order of magnitude estimate was used for the initial unit (-20 percent to +50 percent of the estimated value after subtracting the original contingency). For the accelerators and transmuters, sufficient changes in design and construction were anticipated between the first and second units so that wide ranges were assigned to the first units; a range appropriate for a completed Title II design (-5 percent to +15 percent) was assigned to the second units. For the third and subsequent units, it was assumed that these units were essentially copies of the second units, and an uncertainty range of -5 percent to +5 percent was assigned. This latter range was also assigned to the second and subsequent units of the remaining components, because it was assumed these units were essentially copies of the first ones.

The estimated base operating cost for the first installed unit of a given component was treated in a manner similar to that applied to the estimated capital costs for the first unit built. No further improvement was assumed for subsequent units of the same type built on the same station. For subsequent sites, it was assumed an opportunity arose to make small improvements in the design or facility layout and reduce the operating costs of the new station. An uncertainty range of -15 percent to +5 percent of the operating cost of the component on the previous site was assumed for the first unit built on the next site. All subsequent units on a site were assumed to have the same operating costs.

Anticipated facility and operating efficiency improvements that can be expected over the life of the facilities were taken into account in the uncertainty analysis. A learning curve was applied to the component operating cost estimate after year 4. It was assumed that in any year, operating costs could increase or decrease from the cost experienced in the previous year. The change was distributed from a

maximum of an 85 percent learning curve to an increase in costs equivalent to a 102 percent learning curve (with a most likely value of no learning taking place). The expected value of such a random variable is a 95 percent learning curve over the life of the facility.

Analysis Results

Probability curves were developed for all of the cost elements of the system. The probabilities that the actual capital cost of each component will not exceed the estimated cost ranged from about 32 percent for LWR processing and site support to about 65 percent for ATW Fuel Fabrication. There is a 47 percent probability that total capital costs of the ATW reference system will not exceed the estimated capital cost.

Analyses indicate that operating costs for the ATW reference system are most likely overestimated. Although the transmuter and chemical processing operating costs used in the reference scenario fell within expected ranges of uncertainty, the overall operating cost in this scenario appears to be high when calculated without applying learning curves.

Overall, analyses indicate a 95 percent probability that actual ATW reference system implementation cost will not exceed the estimated system implementation cost, as shown in Figure 3.

A probability curve was generated for the production cost of electricity in the ATW reference system in undiscounted dollars, including RD&D costs. This curve shows, with a 50 percent probability, the cost of ATW electricity would not exceed 36.5 mills/kWh. When cost and revenue streams were discounted with a triangular uncertainty distribution of 0 percent, 3 percent, and 6 percent, and applied each year, the cost of ATW electricity would, with a probability of 50 percent, be 57.4 mills/kWh when RD&D costs are included, or 49 mills/kWh when such costs are excluded.

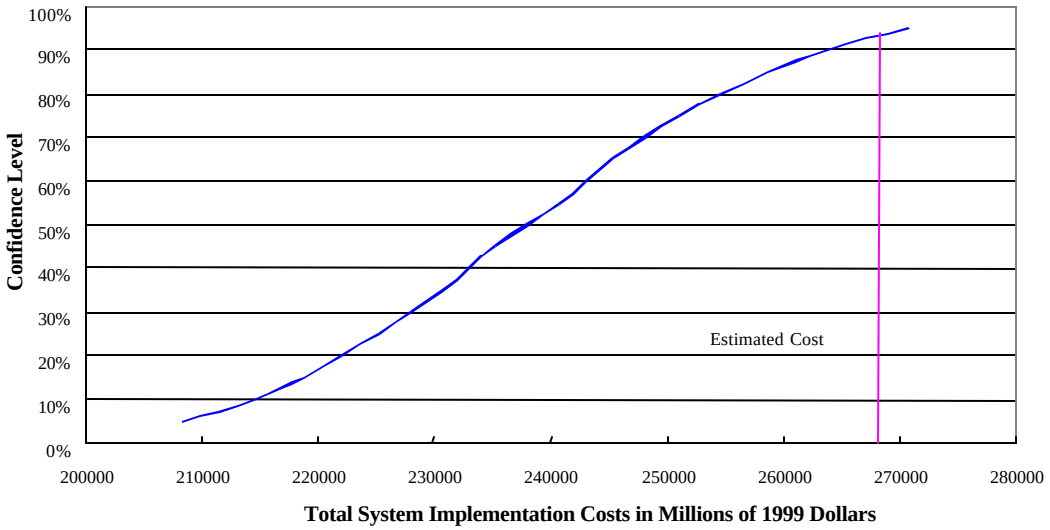

Fig. 3. Probability of Actual System Implementation Costs Not Exceeding the Estimated Cost

Production Costs for Investor-Owned Utilities

The 1996 electricity production costs for investor-owned utilities were used to compare to the unit production costs (mills/kW-hr) of the ATW system. These electricity production costs were obtained from data compiled by the DOE EIA (15). The range of predicted ATW electricity production costs for discounted cost and revenue streams is higher than the production cost for most of the electricity produced by the investor-owned utilities.

SUMMARY AND CONCLUSIONS

A rapid deployment scenario and a schedule were defined for performing the necessary research, development, demonstration (RD&D), and deployment of an ATW system as illustrated in Figure 4. Also shown are the depletion of the LWR-SNF inventory at reactor stations and at the geologic repository, the cumulative electric energy generated, and the cumulative number of ATW repository waste packages in the repository over the system lifetime.

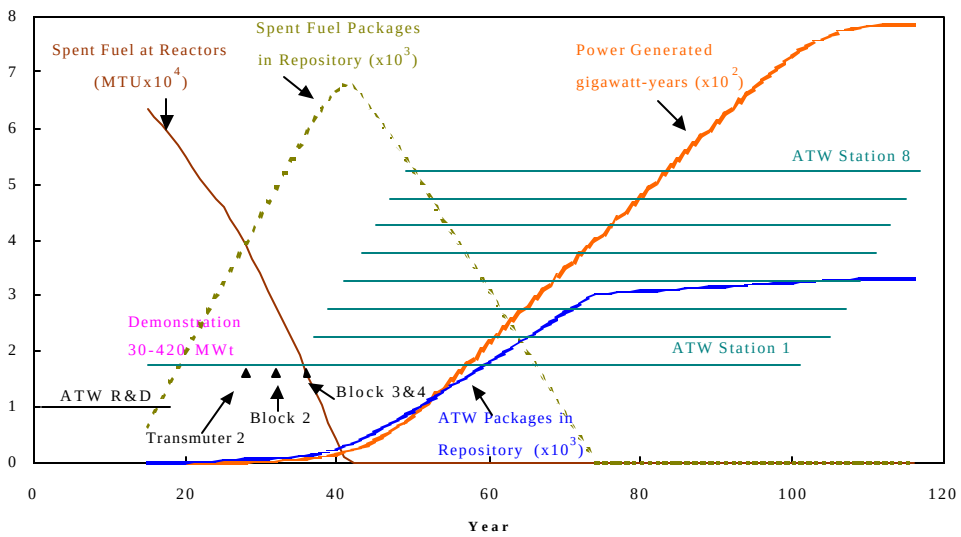

Fig. 4. Integrated Schedule for RD&D and Deployment of ATW Technology

The undiscounted cumulative cost element expenditures and electricity revenues, summed over the system lifetime, are summarized in Table XI, together with the net present values of these same expenditures and revenues, calculated using a net 3 percent annual discount rate. The undiscounted net total system return, assuming the 43 mills/kWh sale value of electricity mentioned earlier, is +15.5 billion dollars over the system lifetime. The discounted net present value of the total system return is -14.8 billion dollars.

An annual net discount rate of 3 percent was applied to both the cost and revenue streams. The resulting net present values for the system cost elements and for the electricity revenue stream are summarized in Table XI.

The estimated costs of the system elements assessed in this paper are uncertain by varying amounts. Some cost estimates are based on similar concepts that have been extensively studied in previous DOE programs (for example, the APT program for accelerators, the ALMR program for the reactors [transmuters]) and adapted to the ATW mission. Other estimates are based on limited engineering studies for similar proposed facilities with limited or no actual experience base.

Table XI. Estimated Undiscounted and Discounted System Life-Cycle Costs, by Cost Element (1999 dollars in billions)

System Cost Elements	Undiscounted	Discounted @ 3 percent
Research and Development	1.8	1.4
Demonstration	9.4	5.7
Post-Demonstration Capital Expenditures	53.5	16.1
Post-Demonstration Operations	209.8	29.7
Decontamination and Decommissioning	5.0	0.2
Total System Life-Cycle Cost	279.4	53.1
Electricity Revenue	294.9	38.3

Because of the wide range of uncertainty on the individual components of system cost, a Monte Carlo analysis was performed to ascertain the probability that actual system cost, if deployed, would not exceed estimated cost. The results of this analysis showed that a 47 percent probability the actual system capital costs would not exceed the estimated cost, and that a better than 95 percent probability indicates the actual system operating costs would not exceed the estimated system operating costs. As a part of the Monte Carlo analysis, the probability was determined to show the system could produce electric power at various rates. Assuming a 3 percent annual discount rate on expenditure and revenue streams, the results showed only a 10 percent probability the system could produce electricity for less than 43.7 mills/kWh, but a 90 percent probability the power would cost less than 55.6 mills/kWh.

The scenario and schedules evaluated in this report were developed for the purpose of estimating the approximate life-cycle costs of an ATW system. No attempt was made to fully optimize the system, to consider alternative systems, or to optimize the overall spent fuel disposal system to reflect the inclusion of ATW technology.

REFERENCES

1. "Estimated Cost of an ATW System," PNNL-13018, Pacific Northwest National Laboratory, Richland, Washington (1999)

2. U.S. Department of Energy. "A Roadmap for Developing ATW Technology: A Report to Congress," DOE/RW-0519, Washington, D.C. (1999)

3. "Roadmap for the Development of Accelerator Transmutation of Wastes: System Scenarios," ANL-99/16, Argonne National Laboratory, Chicago, Illinois (1999)

4. "Preparation of a Technology Development Roadmap for the Accelerator Transmutation of Waste (ATW) System: Report of the ATW Separations Technologies and Waste Form Working Group," ANL-99/15, Argonne National Laboratory, Chicago, Illinois (1999)

5. "High-Power Accelerator Design for ATW Systems," LA-UR-99-3225, Los Alamos National Laboratory, Los Alamos, New Mexico (1999)

6. "Roadmap for the Development of Accelerator Transmutation of Wastes: Target-Blanket System," LA-UR-99-3022, Los Alamos National Laboratory, Los Alamos, New Mexico (1999)

7. "ALMR Actinide Recycle System: 1994 Capital and Busbar Cost Estimates," GEFR-00940, GE Nuclear Energy Advanced Reactor Programs, San Jose, California (1995)

8. "Cost Estimate Guidelines for Advanced Nuclear Power Technologies," ORNL/TM-10071/R3, Oak Ridge National Laboratory, Oak Ridge, Tennessee (1993)

9. "Technology, Safety and Cost of Decommissioning a Reference Pressurized Water Nuclear Power Station," NUREG/CR-0130, U.S. Nuclear Regulatory Commission, Washington, D.C. (1972)

10. U.S. Department of Energy, "Analysis of the Total System Life Cycle Cost of the Civilian Radioactive Waste Management Program," DOE/RW-0510, Washington, D.C. (1998)

11. U.S. Department of Energy, "Viability Assessment of a Repository at Yucca Mountain," DOE/RW-0508, Washington, D.C. (1998)

12. "Report on Waste Burial Charges," NUREG-1307 Revision 8, U.S. Nuclear Regulatory Commission, Washington, D.C. (1998)

13. "Modular Design Study, Phases I & II," Accelerator Production of Tritium (APT) program (TPO-P00-G-TS-00014, Rev 0, Los Alamos National Laboratory, Los Alamos, New Mexico (March 1999)

14. "ALMR Actinide Recycle System: Fuel Cycle Facilities Design Report and Cost Estimates," GEFR-00942, GE Nuclear Energy Advanced Reactor Programs, San Jose, California (1995)

15. U.S. Department of Energy, "Financial Statistics of Major U.S. Investor-Owned Electric Utilities," DOE EIA-0437(96)/1, Washington, D.C. (1997)

Filename:	ATW-LCC-WM'00-022500.doc
Directory:	C:\WINDOWS\TEMP
Template:	C:\Program Files\Microsoft Office\Templates\PNNL-Front97.dot
Title:	Vision Office Products
Subject:	
Author:	Rose Urbina
Keywords:	
Comments:	
Creation Date:	2/25/00 2:39 PM
Change Number:	4
Last Saved On:	2/25/00 2:54 PM
Last Saved By:	Staff
Total Editing Time:	15 Minutes
Last Printed On:	3/12/00 7:11 PM
As of Last Complete Printing	
Number of Pages:	17
Number of Words:	5,927 (approx.)
Number of Characters:	33,789 (approx.)