PNNL-13726

Fuel Cells in Russia: An Assessment of the Market and Potential

December 2001

Advanced International Studies

Pacific Northwest National Laboratory

DISCLAIMER

This report was prepared as an account of work sponsored by an agency of the United States Government. Neither the United States Government nor any agency thereof, nor Battelle Memorial Institute, nor any of their employees, makes **any warranty, express or implied, or assumes any legal liability or responsibility for the accuracy, completeness, or usefulness of any information, apparatus, product, or process disclosed, or represents that its use would not infringe privately owned rights**. Reference herein to any specific commercial product, process, or service by trade name, trademark, manufacturer, or otherwise does not necessarily constitute or imply its endorsement, recommendation, or favoring by the United States Government or any agency thereof, or Battelle Memorial Institute. The views and opinions of authors expressed herein do not necessarily state or reflect those of the United States Government or any agency thereof.

PACIFIC NORTHWEST NATIONAL LABORATORY
operated by
BATTELLE
for the
UNITED STATES DEPARTMENT OF ENERGY

Fuel Cells in Russia:
An Assessment of the Market and Potential

U.S. Team:
Meredydd Evans
Ilya Popov
Astghine Pasoyan
Lumas Kendrick

Russian Team:
Vladimir Zhuze
Vladimir Ivanov
Victor Gritsyna

December 2001

PREFACE

Russia needs investment in innovation to promote economic growth and stimulate employment. Fuel cells provide an opportunity to stimulate such investment. Russian weapon scientists have expertise in fuel cells, although they currently have inadequate funding to pursue their research. Finding long-term, civilian employment for these scientists will help promote non-proliferation at the same time that the scientists discover more cost-effective fuel cell technologies. Fuel cells also have advantages for climate change mitigation and environmental protection because their emissions are much lower than most other energy technologies today.

There is a potential market for fuel cells, and this potential is growing as fuel cell costs come down. The first goal of this assessment is to examine that market, its potential dimension, and viability. In so doing, the authors of this report would like to encourage Western fuel cell companies to take a fresh look at Russia as a potential partner. This report focuses on concrete opportunities to sell fuel cells, opportunities in which a potential buyer has been identified and, in many cases, has expressed an interest in purchasing a fuel cell should a suitable vendor be available. Specifically, the report looks at opportunities in the oil, gas, manufacturing, service and government sectors. Potential fuel cell applications in Russia's Far North and other remote regions could be cost-effective because of the high local costs of traditional power supply.

The second goal of this assessment is to encourage collaboration with Russia in the broader field of fuel cell research. If Western fuel cell companies are able to successfully market fuel cell technologies in Russia, they may find Russian research and development (R&D) more enticing and accessible. The transaction costs of tapping Russian research would likely decline significantly if a company had fuel cell-related marketing operations in Russia.

Russia has many innovative fuel cell technologies, but most are far from commercial viability. Russian researchers have developed technologies for fuel cell components that are potentially much more cost-effective than their Western counterparts, particularly for the balance of plant and certain membrane technologies. Reducing costs is critical to improving the commercial viability of fuel cells throughout the world, and balance of plant accounts for a significant portion of total fuel cell power plant costs.

Partnership will be critical. While it would be very difficult to attract funding to design a completely Russian fuel cell, Russian fuel cell researchers have found productive opportunities to partner with Western researchers and fuel cell companies. Much of this joint research focuses on components that could be integrated into state-of-the art fuel cells in the West.

The market opportunities outlined in this report have been drafted to encourage future collaboration in two important ways. First, Russian and Western experts will find mutual benefits in working together to tap market opportunities. Russian marketing experts have solid experience in successfully selling distributed power equipment in Russia, experience that will be extremely useful to Western companies tapping the Russian market. Second, these market opportunities can help guide Russian fuel cell researchers in outlining the most critical research and steps necessary for commercializing Russian technology. By targeting their research toward the most commercially viable concepts, Russian researchers will find new opportunities to collaborate with Western researchers.

ACKNOWLEDGMENTS

We would like to offer a special thanks to Kristin Suokko and Jiqiang Zhang at W. Alton Jones Foundation for the financial support that made this work possible. We are also grateful to the many Russian and American experts who shared their knowledge on fuel cells, the fuel cell industry, and the Russian energy sector sectors, and provided useful comments and editorial suggestions. In particular, we would like to thank Steve Mladineo and Olga Marina at PNNL, Inta Morris and Joanne Neuber at CRDF, Vladimir Fateyev at the Kurchatov Institute, Sergey Dorosev and Vladimir Chakharev at VNIITF, Sergei Somov at the Institute of High-Temperature Electrochemistry, Barry Gale at the U.S. Department of Energy, and Diane Hooie at the National Energy Technology Laboratory.

I am personally grateful to AISU staff and PNNL reviewers, including Thomas Secrest, Jonathan Elkind, Rosalind Schrempf and Robert Allen for their reviews and editorial suggestions. I would also like to recognize the dedication of several PNNL and CENEf staff members who provided essential support for translations, contracts, and administration: Mary Hughes, Karen King, Tatyana Shishkina, Jay Wertenberger, and Paulette Wright.

Meredydd Evans
Associate Director, AISU
Washington, D.C.

CONTENTS

Preface i
Acknowledgments ii
Contents iii
Abbreviations vi

Executive Summary 1
Research Approach 2
Key Findings 2
Oil and Gas Industries 2
Manufacturing and Power Sectors 3
Service and Government Sectors 4
International Demand for Russian Fuel Cells 4
Next Steps 6

Chapter 1: Introduction 7
Key Technical and Economic Characteristics of Fuel Cells 9
Application Advantages 9
Structural Layout of Fuel Cells 11
Fuel for Fuel Cells 12
Involving Design Organizations 13
Drivers, Barriers and Policy Development: Distributed Generation 13
Policy Issues 14
Financing Modalities 15
Possible Synergies in Markets and Applications 16
Works Consulted 16

Chapter 2: Oil and Gas Industries 18
Introduction 18
The Russian Petroleum Industry 18
Oil Production 19
Oil Consumers 20
Transport of Crude Oil and Petroleum Products 20
Oil Industry Electricity Supply 21
Energy Costs in the Oil Industry 22
Potential Applications for Fuel Cells in the Oil Industry 22
Electricity Supply to Pipelines Connecting Oilfields 22
Electrified Pipeline Safety Valves 23
Cathode Protection Stations 23
Metering Applications 24
Energy Supply to Settlements for Seasonal Workers and Remote Villages 24
Vehicles Supporting the Petroleum Industry 25
Summary: Applications for Fuel Cells in the Oil Industry 26
The Russian Gas Industry 27
Gas Production Technology 27
Fuel Cell Marketing Analysis in the Oil and Gas Industries in Russia 28
Market Barriers 28
Equipment Decision-making 28
Costs for Competing Generation Technologies 29

Marketing Approach 29
Promotion Strategy 30
Conclusions 31
Works Consulted 31

Chapter 3: The Manufacturing and Power Sectors 33
Metallurgy 33
Back-up Power 33
Hydrogen from Coke-Oven Gas 34
Soda Production 36
Power Sector 36
Works Consulted 36

Chapter 4: Service and Government Sectors 38
Residential Sector: Luxury Homes 38
High-Quality, Uninterruptible Power Supply Applications 38
Banks 38
Mobile Phone Providers 39
Companies in Scandinavia Looking for Clean, Reliable Power 39
Municipal Commercial and Residential Buildings 39
Large Public Sector Energy Consumers: Federal Buildings 40
Transportation Sector 43
Works Consulted 44

Chapter 5: International Demand for Russian Fuel Cells for Power Applications 45
Introduction 45
Background 45
Market Forecast for Fuel Cells 47
Commercializing Russian Fuel Cells and Russian Fuel Cell Expertise 53
Civilian Fuel Cell R&D 54
Fuel Cell R&D in the Nuclear Weapons Complex 55
Fuel Cell R&D for Aerospace Applications 56
Russian Power Generation Equipment Market and Equipment Exports Abroad 56
Equipment Manufacturers 57
Exports of Russian Equipment 59
Analysis of Countries: Potential Markets for Russian Exports 63
India 65
China 68
Finland 69
Argentina 71
Exports to Other Countries 72
Recommendations 73
Works Consulted 74

Chapter 6: Conclusions and Tapping the Fuel Cell Market 79
Policy 79
Marketing Strategies 79
Financing for Fuel Cells 81
Partnerships between Russian and Foreign Fuel Cell Manufacturers 81
Final Remarks 81

Appendices A-1
Appendix 1.A Legislation and Russia's Energy Sector Development A-2
Appendix 2.A Maps of Russian Oil Pipelines A-10
Appendix 2.B Gas Turbine Prices Indexed by Heat Rate A-25
Appendix 2.C Discussion on Rybinskiye Engine Catalogue A-27
Appendix 2.D Power Plant Costs A-28
Appendix 2.E Corporate Ratings for Russian Oil Companies for Long-Term Investment A-29
Appendix 2.F Costs for Competing Generation Technologies A-30
Appendix 3.A Firms Producing Small Power Sets: Gas Turbines, Diesel Engines, and Cogeneration Power Sets A-34
Appendix 4.A Russian District Heating Information A-38
Appendix 5.A Foreign Companies Working in Russia A-39
Appendix 6.A Companies Working on Fuel Cells A-44

TABLES

Table 1.1 Summary of Fuel Cell Applications by Sector 8
Table 1.2 Fuel Cell Operating Parameters 9
Table 1.3 Main Stationary Fuel Cell Applications 10
Table 1.4 Anticipated Fuel Cell Equipment Costs 10
Table 1.5 Fuel Cell Operating Costs 11
Table 1.6 Barriers to Introducing Fuel Cells 14
Table 1.7 Policies Affecting the Introduction of Fuel Cells 15
Table 1.8 Advanced Fuel Cells Implementing Agreement Annexes Active in 1999-2003 16
Table 2.1 Major Oil Companies in Russia 19
Table 2.2 Energy as a Percentage of Production Costs 22
Table 4.1 Energy Consumption by Organizations and Enterprises Financed from the Consolidated National Budget of the Russian Federation 41
Table 5.1 Markets for Stationary Fuel Cell Applications 51
Table 5.2 Main Producers of Power Generating Equipment 60
Table 5.3 Russian Power Equipment Exports in 1996-98 62
Table 5.4 Main Russian Power Plant Projects in China 69
Table 6.1 Approaches for Commercializing Fuel Cells 80

FIGURES

Figure 1.1 Schematic of a Fuel Cell System 12
Figure 3.1 Blast Furnace Fuel Supply: Traditional Layout 35
Figure 3.2 Blast Furnace Fuel Supply with Fuel Cell: Layout of H_2 Extraction 35
Figure 4.1 Distribution of Energy Resources Consumed by Budgetary Agencies 41
Figure 4.2 Costs of Fuel and Energy Consumption by Budgetary Organizations 42
Figure 4.3 Fuel and Energy Consumption by Budgetary Organizations 42
Figure 4.4 Distribution of Fuel and Energy Use by Typical Budgetary Facilities 43

ABBREVIATIONS

AC/DC	Alternating current/direct current
CCPP	Combined cycle power plant
CEIDS	Consortium for Electric Infrastructure to Support a Digital Society
CENEf	Russian Center for Energy Efficiency
CHP	Combined heat and power
CRDF	Civilian Research and Development Foundation
DG	Distributed generation
DOE	U.S. Department of Energy
EBRD	European Bank for Reconstruction and Development
EPRI	Electric Power Research Institute (United States)
ESCO	Energy service company
EU	European Union
FC	Fuel cells
FCDG	Fuel cell distributed power generation
Gcal	Gigacalorie
GEF	Global Environmental Facility
GHG	Greenhouse gas
IDC	International development center
IEA	International Energy Agency
IFC	International Fuel Cells
IG-MCFC	Integrated gasifier MCFC
ISTC	International Science and Technology Center
JSC	Joint stock company
kW	Kilowatt
LHV	Lower heating value
LMZ	Leningradsky Metallichesky Zavod (Leningrad Metallurgical Plant)
MCFC	Molten Carbonate Fuel Cell
MNES	Ministry of Non-Conventional Energy Sources (India)
MW	Megawatt
MSU	Moscow State University
NCI	Nuclear Cities Initiative
PAFC	Phosphoric Acid Fuel Cell
PEMFC	Proton Exchange Membrane Fuel Cell
PNNL	Pacific Northwest National Laboratory
PP	Power Plant
PTC	Power Technologies Corporation of California
R&D	Research and development
RD&D	Research, development, and demonstration
RSC Energia	Rocket Space Corporation Energia
REMA	Russian Energy Managers Association
RF	Russian Federation
SCADA	Supervisory Control and Data Acquisition System
SOFC	Solid Oxide Fuel Cell
TCE	Tons of coal equivalent
UETM	Ural Heavy Power Engineering Works
UPS	Uninterrupted power supply
VAT	Value-Added Tax
ZES	Zarubezhenergostroy (foreign economic joint stock company for power infrastructure)

EXECUTIVE SUMMARY

Russia has extensive experience developing fuel cells for its space and military industries, and numerous scientific articles document this research. This report, however, is the first comprehensive look at the potential market demand for fuel cells in Russia. Russia could be an important market participant for several reasons.

First, Russia has several decades of expertise in fuel cells. In fact, Russia designed some of the first space-based fuel cells in the 1960s. More recent research has focused on new, low-cost membrane technologies, catalysts, anode and cathode materials, and balance of plant. These technologies and expertise could be applied to lower the cost of fuel cells globally, but only if Russia is able to partner with fuel cell manufacturers and successfully commercialize its know-how.

Second, Russia has large, remote areas unconnected to power and heating grids. Oil and gas are big business in some of these remote areas, where power supply costs are high. Fuel cells could be competitive in some of these remote applications even today.

Third, while electricity demand is down in Russia, purchases of power and heating equipment are stable or growing. This is particularly true in certain industries, such as metallurgy, and in the numerous private residential and commercial buildings being built in Russia.

Initially, the market for fuel cells in Russia is likely to be concentrated in niches, much like in the United States, Japan, and Western Europe. For example, the oil and gas industries in Russia have a realistic, near-term potential for fuel cells in specific applications because of the high costs of energy supply in the remote oil and gas regions and the on-going investments that Russian oil and gas companies are making in power and heating equipment. A key goal of this report is to present these niche opportunities in order to encourage collaboration between Russian and Western energy and fuel cell companies. Such collaboration may also create opportunities to integrate Russian R&D into fuel cells manufactured in the West, and ultimately, if the demand is sufficient, to manufacture fuel cells in Russia itself.

The report focuses on demand for fuel cells, though it does address supply in three ways: to provide basic reference information on fuel cells, to describe design advantages of fuel cells for specific applications, and to recognize the synergies between Western fuel cell production and Russian fuel cell R&D.

This assessment is organized into six chapters. The first chapter is an introduction, which provides information on Russian energy systems and basic fuel cell design. The four central chapters describe the potential demand for and barriers to fuel cells in several sectors:

- Oil and gas
- Manufacturing and power sectors
- Service and government sectors
- International demand for Russian fuel cells

The final chapter provides conclusions.

RESEARCH APPROACH

The team selected market sectors and niches for more detailed study using several criteria in a multi-step approach. The team began by considering the sectors in which fuel cells have made initial inroads in Western Europe, North America, and Japan. The team then took into account Russian circumstances, looking at the overall demand for new energy equipment by sector, the ability of players in those sectors to pay for new energy technologies, and the existing competition for energy equipment in Russia. Based on this, the team drew up a list of sectors for more detailed analysis, the results of which are presented below.

Because fuel cells are a new technology, it is not realistic to use existing sales data as a means of projecting demand. Rather, the team relied on information about current demand for power and heating equipment in applications that seem suited to fuel cells. This information was then supplemented by interviews with experts, company representatives, and government officials in Russia to determine their willingness to consider and ultimately invest in this new technology. In some cases, the team based its assessment on written expressions of interest in purchasing fuel cells for specific applications (for example, design documents for new oil fields in Western Siberia or a letter of interest from the Moscow City Government).

KEY FINDINGS

Russia does have a realistic market demand potential for fuel cells in the near-term, although the demand will be focused in specific sectors and niches, at least initially. Fuel cells have a comparative advantage in certain sectors because of the high capital costs of existing technologies, the need for reliable power, or the image that fuel cells bring as a cutting-edge technology. Industrial firms are likely to be interested in fuel cells only if the costs are truly competitive since energy can be a major component of industrial production costs. Service sector companies such as banks and mobile phone service providers might be interested in fuel cells because of their technological, state-of-the art image, and because of their reliability. Government institutions might be interested in fuel cell demonstrations to promote fuel cells for environmental or non-proliferation purposes.[1]

Oil and Gas Industries

Oil and gas production in Russia is concentrated in northwestern Siberia, a land of tundra and bitter winters. In most of this region, power and heat are supplied locally (not through centralized networks) because of the sparse population and the tremendous losses associated with transmission systems in this environment. Because the region is so remote, capital and operating costs for power and heat supply are high. Fuel cells could offer several advantages:

- Their conversion efficiency is significantly greater than that of the diesel engines that typically supply power in Russia's Far North;
- Their small size will limit transportation costs;

[1] Much fuel cell research in Russia has taken place in the closed, nuclear cities at laboratories under the aegis of the Ministry of Atomic Energy (Minatom). Promoting civilian R&D into fuel cells can help stabilize the economic situation in these cities, thus reducing the risk of nuclear proliferation from these major nuclear research hubs.

- Their relatively quick installation time would be useful given the shortened construction season of the Far North; and
- Their easy maintenance would help ensure reliability in remote areas and reduce costs.

Based on these advantages, the team feels that fuel cells potentially could be competitive in several applications in the oil and gas industry. Chapter 2 on oil and gas provides in-depth descriptions of the following opportunities for fuel cells:

- Energy supply to electrified oil pipeline safety valves;
- Stable power supply to borehole flow metering equipment in oil and gas fields;
- Uninterrupted power supply to distributed information and metering systems[2] in oil and gas production sites;
- Energy supply to cathodic protection stations;
- Heat and power supply to worker camps and remote villages;
- Fuel cell vehicles for oil field transportation.

The current cost of supplying power in each of these applications varies widely, suggesting that the demand for fuel cells will be concentrated in specific niche markets in the short term. Demand will likely expand to larger niches and market segments as fuel cell prices come down and economic conditions in Russia improve.

Manufacturing and Power Sectors

Manufacturers may also be interested in fuel cells for certain applications, particularly where hydrogen gas is available from industrial processes and direct current power is needed. The metallurgical industry is one potential niche market for fuel cells. One application might be large accumulator batteries that supply back-up power to converters, refining furnaces, or mixers. Uninterrupted power supply, which fuel cells can offer, is critical in such applications because even a brief power outage can cause millions of dollars in losses and permanent damage to production equipment. Fuel cells might have an additional advantage in this application because they could operate without alternating current/direct current (AC/DC) converters, bringing costs down by approximately 30 percent. Moreover, many steel mills produce hydrogen from coke-oven or blast-furnace gas; hydrogen is the fuel of choice for fuel cells. Fuel cells could be paired with a new cryogenic technology to extract hydrogen from coke oven and blast furnace gas while deriving the energy for the extraction from a turbo-expander. A turbo-expander could capture the energy that is typically lost when pressurized gases are expanded before going into distribution systems.
The soda industry currently uses waste hydrogen for heat production. Fuel cells could produce heat more efficiently than existing technologies and could simultaneously produce electricity, which could reduce energy expenses at soda plants. There are more than 10 large soda factories in Russia.

[2] Technically, these systems are called Supervisory Control and Data Acquisition systems or SCADA.

Service and Government Sectors

Commercial companies in the service sector may be interested in purchasing fuel cell because of their reliability. Companies with major computer systems to protect, such as banks and mobile phone providers, would likely have the greatest interest in fuel cells because a brief power loss could result in major losses. The Russian Savings Bank, Russia's largest and most widely represented bank, has already expressed an interest in fuel cells.

Luxury hotels might also be interest in fuel cells because of their reliability and their image as a modern technology. This market is likely to be small, but hotels, particularly in cities notorious for power and heat outages, might be willing to make such an investment as a demonstration project.

Similarly, luxury homebuilders and owners might be interested in fuel cells. Luxury homes in Russia typically use the most advanced foreign-made heating and air conditioning systems. Affluent "new Russians" have expressed a willingness to invest large amounts in their homes as a status symbol. The best way to tap this market would be to work through one of the numerous companies that build or service such residences. As fuel cell costs come down and economic and investment conditions in Russia improve, fuel cells may become more accessible to a broader spectrum of the population.

The Russian federal government is also a potential fuel cell customer. The federal government consumed over $2 billion of energy in 1997. Several federal agencies have expressed a desire to promote fuel cells both as a means of promoting Russian R&D and because of the relative environmental benefits of fuel cells. The Russian Ministry of Defense is the largest federal energy consumer ($832 million spent for energy in 1997) and has funded significant fuel cell R&D. The Ministries of Education, Internal Affairs, and Health are also major energy consumers. The Ministry of Health runs a large network of hospitals, which ideally should have emergency back-up power. While many hospitals in Russia do not have emergency generators or heat sources, they are likely to gradually install such back-up systems as Russia's economy grows and citizens demand improved health care. Fuel cells would not likely capture the majority of this market for back-up power, because hospitals tend to be poor, but some might be willing to test the technology in the short term.

There are also opportunities for fuel cells in the transportation sector, and at least two Russian companies are considering developing fuel cell vehicles. AvtoVAZ, Russia's largest car and vehicle manufacturer, has studied the feasibility of producing fuel cell vehicles. Recently, the company unveiled a prototype fuel cell sports-utility vehicle (AvtoVAZ, 2001). General Motors recently invested in AvtoVAZ through a joint venture to produce traditional sports-utility vehicles. In addition, Power Technology Corp in California and Rocket Space Corporation Energia in Russia have formed a partnership to develop mobile power fuel cells for buses, trucks, trains and related applications.

International Demand for Russian Fuel Cells

Because Russia does not currently produce commercially viable fuel cells, this section of the report assesses the willingness of international customers to buy Russian fuel cells and examines the countries that might have a demand for Russian fuel cells or fuel cell components. Components are important to consider, particularly for the next 10-15 years, because Russian researchers and companies could commercialize individual components before they could commercialize a complete fuel cell.

This chapter concentrates on the potential demand for Russian fuel cells for power applications. The team used a four-step approach, summarized below, to assess how Russia might be able to market and sell fuel cells abroad:

1. Examine the potential world markets for fuel cells to identify which regions will have the greatest demand for fuel cells and in what applications fuel cells will most likely be used. This analysis can also help in understanding customer motivations to buy fuel cells for different applications.

2. Review Russian equipment exports to understand whether customers have confidence in and are willing to buy Russian power equipment and to see where Russia sells equipment internationally. While fuel cells are a new technology, Russia's chances of marketing this technology will be greater if it already produces and exports sophisticated equipment comparable to equipment that large, well known energy companies produce.

3. Compare information from the first two steps and more thoroughly analyze the countries that traditionally have bought Russian power equipment and will have a demand for fuel cells. By targeting these markets, Russia would have a greater chance of successfully selling fuel cells. At the same time, though, Russia may face intense competition from companies already exporting fuel cell technologies to these regions. For example, China and India are attractive markets for fuel cell suppliers because of their growing energy demand. Since Russia already sells power equipment to these countries, it is important for Russia to target these markets for fuel cell technologies while facing competition from other foreign companies. Creating partnerships with such companies may help Russia commercialize its technologies and enter these markets. It is also important to look at regions not expected to be the largest fuel cell markets but where Russia already exports equipment, for example in Latin America. In addition, it is important to consider countries where Russia does not sell much equipment today but that regularly buy environmentally friendly equipment. Western European countries such as Finland, where Russia sells gas turbines, or Sweden are good examples. In each country, it will be important to identify niche markets and end-users willing to invest their money in Russian fuel cells. Initially, it is unlikely that fuel cells will have broad consumer appeal across an entire nation because of their high cost. The exceptions may be hospitals or banks, where cost will be less important than environmental or safety issues. Russia will not likely see high demand for its fuel cells initially, and therefore it will be necessary to target customers carefully.

4. Identify companies that already have businesses in Russia and promote fuel cell technologies. For example, Ballard, the world's largest fuel cell technology supplier, has an office in Russia through a partner company, Alstom. Siemens/Westinghouse is another example of a company actively promoting fuel cells and maintaining a presence in Moscow. Cooperation between Russian fuel cell designers and these companies may be mutually beneficial. For Russia, such cooperation could potentially spur R&D development, introduce Russian technologies to more customers, and open additional markets worldwide. In return, foreign companies will have access to low-cost technologies and high-quality science.

This chapter of the assessment also contains a review of on-going Russian fuel cell R&D to provide some background on potential Russian supply of fuel cells or their components.

NEXT STEPS

Realistic, focused opportunities exist to market fuel cells in Russia even today, although broad appeal of fuel cells is many years off primarily because of the costs. Tapping the opportunities that do exist should first involve educating key experts and decision makers about the advantages and potential of fuel cells. Such individuals include pipeline design experts at institutes that work for the Russian oil and gas industries, energy managers at manufacturing facilities, and building architects and contractors. These individuals are important to making equipment decisions at a large number of facilities, so if they had a positive experience with fuel cells at a pilot facility, they would be in a position to apply fuel cells at many new sites.

Likewise, it is important to interest foreign fuel cell firms in the Russian market to provide a source of fuel cells. There are two reasons that foreign firms should be interested in the Russian market. First, credible potential buyers exist, albeit for small volume purchases initially. Second, research on fuel cells is on-going in Russia. Russia has several unique fuel-cell related technologies that could help bring the costs of fuel cells down globally if they were commercialized and integrated into an existing fuel cell. One of the problems Western firms have experienced in tapping this research are the high transaction costs of bridging the cultural divide between ostensibly for-profit ventures and researchers who have top-notch scientific skills but little practical knowledge of market economics. If Western firms were already operating in Russia to market fuel cells, the transaction costs of working with Russian scientists might decline significantly.

Tapping the existing opportunities is important because they can serve as stepping stones to broader application of fuel cells. As Russians learn more about fuel cells, they are likely to be more willing to use them. They will feel more confident in the technology's reliability (a key selling point). Russian fuel cell researchers, particularly those who partner with Western firms, will also learn more about the market demand for fuel cells and will be better equipped to target their research toward consumer demands and commercialization.

CHAPTER 1: INTRODUCTION

While Russia's population is less than 2.5 percent of the global population, its fossil fuel reserves are estimated at about 30 percent of total global reserves. Russia holds the world's largest natural gas reserves, the second largest coal reserves, and the eighth largest oil reserves.

Russia built a highly centralized power supply and distribution system in the 20th Century. In the end, Russia created the world's largest integrated power system, integrated gas supply system and network of oil pipelines. Russian municipal district heating systems are also highly integrated.

Recently, the disadvantages of this intensive centralization have become more apparent. Major equipment in power plants and along oil and heating pipelines is in a dangerous state of disrepair as a result of chronic funding shortages for renovation and upgrades. Frequent power outages, oil pipeline leaks, and heat supply disruptions have forced the Russian government to respond with costly emergency measures.

Russia's "Energy Strategy to 2020", adopted by the federal government in 2000, recommends $700 billion in investments in the fuel and energy complex[3]. According to the Energy Strategy, the majority of these investments should focus on restoring the current system, instead of investing in distributed generation (DG), which might favor fuel cells.

The Energy Strategy recommends that during the first phase (covering the next 4–6 years), the existing large-scale equipment and infrastructure will be restored and renovated. The second stage (lasting until 2012) envisions replacing energy equipment at large fuel and energy consumers.

The Energy Strategy developers could not fail to mention the growing trend toward distributed generation. The Energy Strategy points out the need to address distributed generation; however, it does not specify a timetable or funding levels. Moreover, little funding for new, centralized investments is available. Private companies and consumers have expressed a growing willingness to invest in distributed generation to improve the reliability of their power supply.

Given these circumstances, Russia needs an aggressive, independent strategy to promote new technologies on the market, including advertising and demonstration projects. Fuel cells are an emerging technology with the potential to address many of the challenges facing the Russian power generation and distribution system. Table 1.1 provides general background on fuel cell applications. (Acronyms for the types of fuel cells listed in Table 1.1 are explained in Table 1.2.)

[3] The official document is available at www.mte.gov.ru/oficial/strateg.htm

Table 1.1 Summary of Fuel Cell Applications by Sector[4]

Industry	For industrial applications (200-5,000 kW), competition with engines and small turbines will be an important factor that could limit the fuel cell market. Also, fuel cells of this size are not yet ready. Potential applications in the future may include process heat, which would require high temperature fuel cells. The first to be available may be 250 kW molten carbonate fuel cells (MCFCs) by about 2005, which would address only the lower capacity range of this application. Larger fuel cells, both MCFC and solid oxide fuel cells (SOFC), will be commercialized later. Energy service companies (ESCOs), utilities and industry associations could serve as "champions" to help implement fuel cell strategies.
Commercial /Service	For commercial and other applications such as hospitals (10-1000 kW), fuel cells will also have to measure up against engines and small turbines. Fuel cells are likely to be available in the lower capacity range (10-250 kW) by 2003 to 2005, with phosphoric acid fuel cells (PAFCs) already commercially available, albeit at a premium price. Larger systems (500-1000 kW) could become commercially available in 2005-2010. These applications can also use waste heat but may have lower load factors, making capital-intensive technologies like fuel cells less attractive. Net metering, time-of-use metering, and reverse power sales become important issues for fuel cells because of the lower load factors. In some applications, power outage costs alone can justify investment in fuel cells, according to some studies in North America that show outage costs of tens of thousands of dollars per hour for services such as telecommunications and airline reservations systems, and up to millions of dollars per hour for stock brokerage operations. ESCOs, utilities, and public authorities could be "champions" for implementing such intervention strategies.
Residential High Income	There is a potential market for high-income urban and suburban households whose owners want full-service power in the 5-10 kW range. Users of these applications would otherwise be served by diesel-fired power generation sets. The amount of fuel displaced (and hence the greenhouse gas [GHG] benefits) may be small if fuel cells are to be used only for grid-outage power. These applications would tend to highly value the noise reduction and other qualities of fuel cells. The coming of commercial proton exchange membrane fuel cells (PEMFC) of up to 10 kW by 2004 could serve this market. Champions could be ESCOs, property managers or developers, or diesel-fired power generation set suppliers.
Residential Middle Income	A potentially larger market is urban middle-income households in areas with frequent grid interruptions and who want a source of stand-by power for their most important power needs. These households could be served by 0.5 to 1-kW PEMFCs (perhaps fuelled with reusable canisters of hydrogen gas), which could be on the market before other fuel cell types[5]. These households would otherwise buy small diesel or kerosene motor-generator sets (gensets) for this application. Once again, the fuel displacement may be small, unless net metering and time-of-use metering allows households to also profitably contribute fuel cell power as utility peaking power. A variety of public agencies, property developers or business associations could serve as champions, including dealers currently selling diesel gensets.
General Resid.	Many PEMFC and SOFC developers are targeting the broad residential sector, where they see the opportunity for fuel cell systems to replace boilers. This market is potentially very large but is affected by a variety of climatic and market considerations and is highly cost-sensitive.
Off-grid	One of the most appealing markets is off-grid village power applications in the range of 5-100 kW. These applications are currently served primarily by diesel gensets; currently 20,000 are estimated to be operating in villages in Russia. Fuel cells in these applications could be competitive sooner than in many other applications, due to the high cost of power production from the diesel gensets. Reversible fuel cells could also facilitate the introduction of renewable energy technologies into these systems, negating the need for large battery banks for hybrid systems. The most important remaining issues for consideration in these applications are: (1) the supply of fuel(s) on which they would operate; and (2) the provision of operation and maintenance services, which would be limited in rural areas, requiring retraining existing diesel technicians or bringing in other qualified service personnel into remote areas.

[4] This table is derived from a similar table distributed at the Imperial College Centre for Energy Policy and Technology (ICCEPT)'s Fuel Cell Workshop Summary, held in Paris May 22-24, 2001 and sponsored by the Global Environmental Facility, the International Energy Agency, and the United Nations Environment Program. Tom Hamlin first prepared the table.

[5] Ballard and Coleman Powermate have announced that they will release commercial portable PEM fuel cells with capacities of 500 W for sale by the end of 2001.

KEY TECHNICAL AND ECONOMIC CHARACTERISTICS OF FUEL CELLS

The fuel cell is a relatively new power technology, not produced commercially in Russia yet. Typical fuel cell capacity is up to 200 kW (e) and 200 kW (h). They are commercially available in the United States, Western Europe and Japan. Banks, hospitals and computer centers have bought fuel cells for stable power supply for electronic devices.

Fuel cells come in a variety of types and designs. Some are still in the experimental stage, and some have reached industrial testing. Our task is to define the political, economic, and technical potential for implementing fuel cells in Russia. It is essential to look at the general characteristics of fuel cells and analyze the possible ways fuel cells could be developed in the future.

Hydrogen and fossil fuels are used for fuel cell power generation. Fuels other than hydrogen must be converted into pure hydrogen in a reformer, which is part of the fuel cell's balance of plant. Fuel cells are not inexpensive: they currently cost at least $3,000 per kW of power capacity. The costs are expected to go down to $2,000 within 3-5 years. At the same time, the power efficiency of Fuel cells is now 45%-50%, which elsewhere is only possible at comprehensive combined cycle power plants (CCPP) with power capacity of more than 40 MW. Fuel use efficiency of the fuel cell is 80% when both power and heat are used. Fuel cells can be highly reliable because they have no moving parts. Their operating life is now 30,000-40,000 hours, and in the future, fuel cells may be able to operate for as long as 80,000-100,000 hours.

Application Advantages

Fuel cell technologies can have great economic advantages because of their design. Widespread application of fuel cells will decentralize power generation and minimize transmission loss. Fuel cells are also modular, allowing flexibility in meeting growing energy demands. In addition, fuel cells are environmentally beneficial. Generating power with fuel cells results in low emissions because fuels are not combusted. This is particularly true when hydrogen is used as a fuel. Table 1.2 summarizes the operating parameters of the most promising fuel cell technologies.

Table 1.2 Fuel Cell Operating Parameters

Technology	Market model inputs			
	Representative Unit Size	System Electric Efficiency (Percent lower heating value [LHV])	Heat Quality or Potential (^{o}C)	Percent of Waste Heat Accessible
Proton Exchange Membrane (PEMFC)	3 kW	30-40%	60 (water)	25-49%
	50 kW	33-40%	60 (water)	27-49%
Molten Carbonate (MCFC)	100 kW-3 MW	45-55%	300 (gas)	25-49%
Tubular Solid Oxide (SOFC)	200 kW-3 MW	45-55%	500 (gas)	25-49%
Planar Solid Oxide (SOFC)	3 kW	35-45%	400 (gas)	31-64%
	50 kW	45-55%	400 (gas)	25-49%
Molten Carbonate (MCFC)	100 kW	45-55%	200 (steam, oil, or air)	33-37%

The main disadvantage of fuel cells is their high cost. This is a result of the single unit or low series production and of high costs of materials used to manufacture them. Table 1.3 lists the main reasons fuel cells are appealing to customers in spite of their high cost.

Table 1.3 Main Stationary Fuel Cell Applications

Fuel Cell Application	Advantages	Market Barriers
Grid-Connected Central	• Low emissions • High efficiency	• Project scale is large compared to fuel cell module sizes • High cost of technology • Competition from large-scale combined cycle turbines
Grid-Connected Distributed (Substations)	• Low emissions • Modularity • Autonomous operation	• High cost of technology
Onsite, Grid-Connected	• Low emissions and noise • Cogeneration potential • Power quality	• High cost • Lack of service infrastructure • Competition from microturbines and other small-scale equipment
Off-Grid, Portable	• Power quality • Low emissions and noise	• High cost of technology

Source: Arthur D. Little 1998.

Tables 1.4 and 1.5 are useful in determining the expected costs associated with the different types of fuel cells. Table 1.4 summarizes equipment costs while Table 1.5 provides information on operating costs.

Table 1.4 Anticipated Fuel Cell Equipment Costs

Technology	Anticipated Equipment Installation Cost Factors Upon Commercialization			
	Representative Unit Size	Initial Commercial Introduction	Initial Factory Cost, US$/kW	Wholesale Factory Cost, US$/kW
Proton Exchange Membrane (PEMFC)	3 kW	2003-2004	2,500-5,000	700-1,150
	50 kW	2003-2004	2,500-5,000	650-1,150
Molten Carbonate (MCFC)	100 kW-3 MW	2003-2005	2,500-4,000	1,100-1,900
Tubular Solid Oxide (SOFC)	200 kW-3 MW	2002-2003	1,500-2,500	800-1,350
Planar Solid Oxide (SOFC)	3 kW	2002-2004	2,500-5,000	1,000-1,350
	50 kW	2004-2006	2,500-5,000	600-900
Phosphoric Acid (PAFC)	100 kW	Current	3,500-4,000	2,000-4,000

Source: Teagan 2001.

Table 1.5 Fuel Cell Operating Costs

Types of fuel cells	Operating Cost Elements (Large-Scale Production), U.S. cents /kWh			
	Equipment Replacement	Labor for Equipment Replacement	Routine Service	Total Cost
Proton Exchange Membrane (PEMFC) Residential	1-2	0.17	0.48	1.7-2.7
Proton Exchange Membrane (PEMFC) Commercial	1-2	0.03	0.03	1.1-2.1
Molten Carbonate (MCFC) Commercial	1.9-2.6	0.02	0.03	2.0-2.7
Tubular Solid Oxide (SOFC) Commercial	1-1.5	0.04	0.07	1.1-1.6
Planar Solid Oxide (SOFC) Residential	1-1.5	0.17	0.48	1.7-2.1
Planar Solid Oxide (SOFC) Commercial	0.8-1.1	0.03	0.03	0.8-1.2

Source: Teagan 2001.

"Fueled with pure hydrogen, fuel cells produce zero emissions of carbon dioxide, oxides of nitrogen or any other pollutant. Even if fueled with fossil fuels as a source of hydrogen, noxious emissions are orders of magnitude below those for conventional equipment. They offer significant improvement in energy efficiency as they remove the intermediate step of combustion and mechanical devices such as turbines and pistons. Unlike conventional systems, they operate at high efficiency at part load. Also, unlike conventional plants, their high efficiency is not compromised by small sizes. High efficiency saves fuel and reduces CO_2 emissions." (World Fuel Cell Council).

Structural Layout of Fuel Cells

Figure 1.1 shows the standard structure of a complete fuel cell unit ready for commercial use. If pure hydrogen is used as the fuel, no reformer is needed (which is the case for space applications). Likewise, if direct current power is needed, the fuel cell unit does not need an alternating current/direct current (AC/DC) converter.

High temperature insulation is a critical point in the structure of a fuel cell complex. This insulation must be compact and provide reliable separation between two sections that have principally different temperatures, namely: the reformer and fuel cell proper in one section, and the gas separator and AC/DC converter in the other. The latter additionally must be cooled down.

The search for market niches for fuel cells must not be based exclusively on fuel cells properties but rather on the advantages of major characteristics to the consumer. Based on this, fuel cells must contain a fuel reformer to produce hydrogen and an AC/DC converter for relatively low constant voltage and high-tension current into standard parameters of AC networks. These elements must be highly efficient and have a wide range of operating loads because this will determine how reliable and advantageous fuel cells are as commercial products.

Figure 1.1 Schematic of a Fuel Cell System

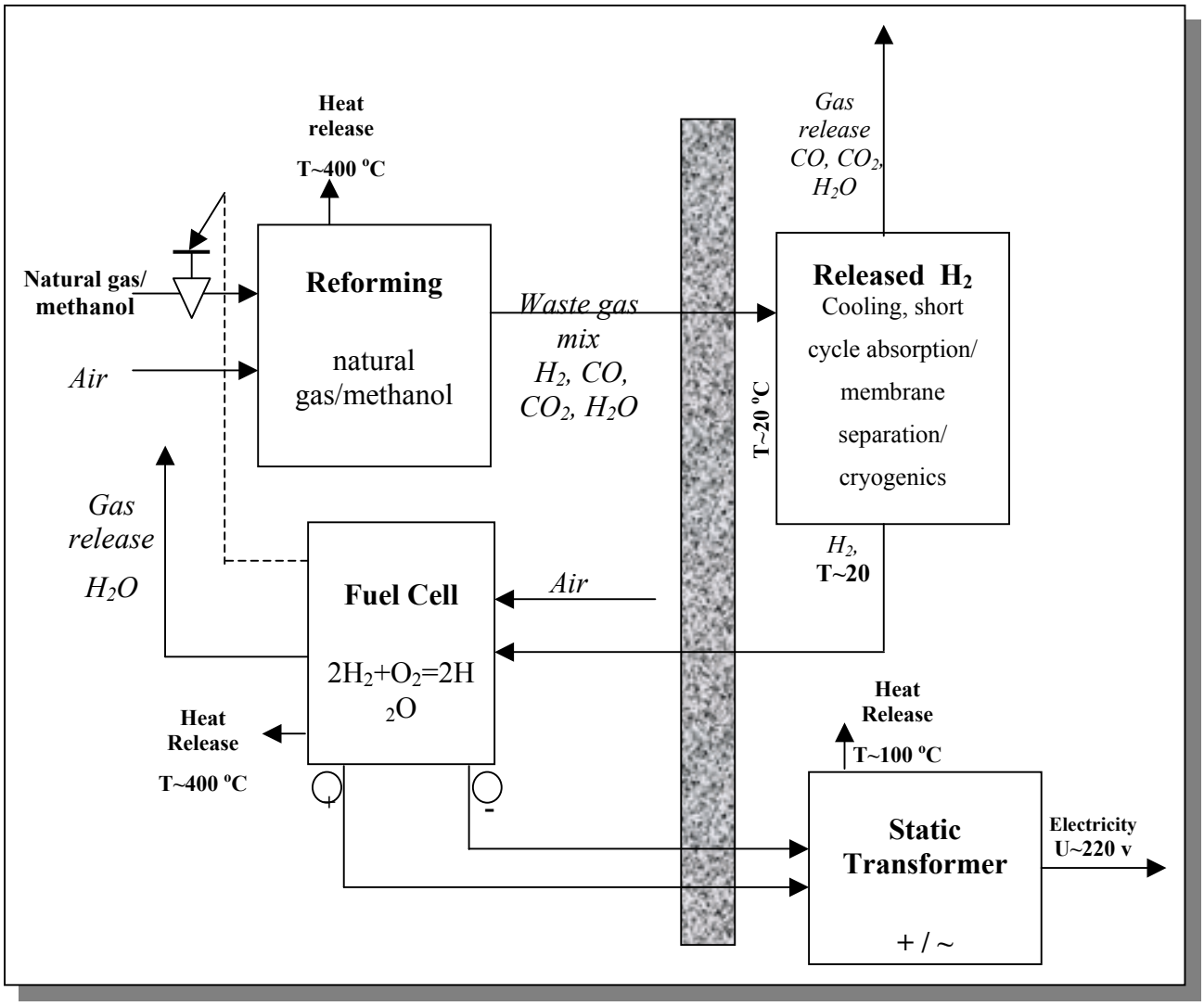

Fuel for Fuel Cells

Hydrogen is the fuel of choice for fuel cells, but because it is difficult to handle, most fuel cells use reformers to derive hydrogen from hydrocarbons. Natural gas (methane) and liquid gases (propane-butane), methanol, or light gasoline (condensates) are used as raw materials for the reforming process. Ethanol (ethyl alcohol) also seems to have good prospects as a fuel. Fuel cells designed for use in space, such as those on the Shuttle, Apollo or Russia's Mir, use pure hydrogen as a fuel directly without reforming it from other fuels. Research is also underway to find safer and more compact ways to store hydrogen, but in the meantime, fuel reformers are essential.

Oil companies have easy access to many hydrocarbon products: natural and liquid gases are important components of oil well gas, and methanol is a major reagent in gas field development.

Fuel cells in the oil extraction industry could use natural gas where gas mains are located and liquid gases in other locations. Methanol is even easier to use as a fuel as it does not need to be kept under high pressure. In addition, there is a patented method for simultaneously

generating stationary power and synthesizing methanol from oil well gas (the Starcam technology, which Foster Wheeler has applied to industrial application).

INVOLVING DESIGN ORGANIZATIONS

Involving design organizations or bureaus could help promote fuel cells in the natural gas sector. Engineers and designers must have menus of design solutions applicable to concrete facilities, and they must be aware of methods to make such solutions work. These are prerequisites for rapidly bringing new technologies to market. The paradox is that design organizations, depending on their professional knowledge and their access to new information, may either help or hinder the introduction of new technology. It makes sense to organize special courses and seminars about fuel cells for design engineers. There are design institutes in every industrial sector, for example, Gasavtomatika for Gazprom and Neftechimavtomatika for the oil industry.

DRIVERS, BARRIERS AND POLICY DEVELOPMENT: DISTRIBUTED GENERATION

This section outlines the drivers and barriers for fuel cell distributed power generation (FCDG) as well as some of the policy issues that need consideration. Russia's existing power equipment is becoming very obsolete and energy supplied by private utilities (called energos) is becoming more and more costly and unreliable. Unreliable centralized power supply and lack of stand-by power sources became dangerous for facilities and the population. This also jeopardizes emerging industrial growth and clearly indicates the need for management reforms. After the collapse of the Soviet Union, the Russian energy sector passed through several stages of energy sector reforms. Appendix 1.A of this report provides more information on Russian energy sector development and legislation.

In general, the energy tariffs for both industrial and residential sectors have been growing rapidly. Some experts and consumers have begun considering other alternatives to central power supply, particularly small-scale, on-site power generation. Fuel cells and other small-scale technologies can supply heat and power in a cost-effective, decentralized manner.

Small-scale and renewable energy equipment currently generates around 50 billion kWh per year in Russia, which is approximately 5 percent of Russia's overall electricity generation. By 2000, many energy experts were convinced of the need for distributed generation as a sound supplement to centralized energy supply. The market for decentralized power generation will grow rapidly since many Russian industrial enterprises are now considering construction of their own small power plants.

Electricity generation costs may be significantly lower at new small cogeneration plants compared to the costs of purchasing electricity from an energy utility. Energos' energy tariffs are 2 to 3 times higher than the price of electricity generated at RAO EES power plants and sold on the federal wholesale energy market. This is mainly due to a multitude of miscellaneous charges for network maintenance, transportation losses, and cross-subsidies. At the same time, the efficiency of heat and power generation and the level of automation at new, small power plants are 2 to 3 times better than the average efficiency for Russian energy utilities. Central power plants in Russia have an average efficiency of 25 percent, compared to 36 percent average efficiency in the United States. On the other hand, small-scale fuel cell power plants for local power generation have efficiencies of 45-50 percent for power generation only and they are even more efficient when the waste heat is also used. This

makes them a good alternative to decentralized electricity and heat supply from an efficiency point of view.

Business is booming in Russia for companies that supply equipment for industrial power plants. However, it is important to remember that domestic equipment is typically about 30 percent cheaper than similar foreign equipment.

It is also possible that the existing large industrial power plants will eventually enter the federal wholesale energy market, thus becoming independent power producers. The federal authorities will have to develop legislation to regulate the relations between independent energy producers and energy utilities. The independent power producers will also need a legal framework to provide guarantees and create a more stable commercial environment for selling power back to the grid.

FCDG could potentially capture the majority of the DG market by 2020, assuming that technological requirements are met and projected cost reductions are achieved. However, for this to happen, the following issues need closer examination:

- Local and regional technical and policy constraints on DG and infrastructure constraints on FCDG;
- Uncertainty over fuel cell cost and demand curves;
- The effect of possible synergies between FCDG, renewables, and transport; and
- On-going development in competing technologies.

A number of drivers are behind the current development of fuel cells, ranging from cleaner power generation to enhanced product performance and customer satisfaction. However, the introduction of fuel cell systems to the market faces a number of barriers. Four broad barrier categories and possible roles for policy are summarized in Table 1.6.

Table 1.6 Barriers to Introducing Fuel Cells

Cost	Fuel cells are not yet cost-competitive with existing technologies in most applications. Well-structured policies can make fuel cells competitive more quickly.
Infrastructure	Fuel cells may require supporting infrastructure, such as fuel supply, qualified service staff, or the availability of local combined heat and power (CHP) networks. Appropriate policies can encourage the creation of infrastructure over the long term.
Capital stock turnover	Replacement rates of generating technologies are usually very slow. Policy interventions can increase the rate of replacement.
Market organisation	Investments in energy efficient technologies may be discouraged by the structure of the energy, construction, or other markets. Policies can change the manner in which markets operate.

Source: The Center for Energy Policy and Technology Imperial College of Science, Technology and Medicine 2001.

POLICY ISSUES

The benefits that could result from introducing fuel cell technologies should justify support for facilitating their introduction. Intervention by the Global Environmental Facility (GEF) and International Finance Corporation can address some of the barriers to fuel cells, but removing many barriers and creating a favorable environment for fuel cells will require suitable policies at a national level. In the wider context, clean DG in general is an important area to consider, and there is a need to effectively include DG in electricity sector reform.

Policy instruments, clearly, should be aimed at achieving objectives of social or economic interest and generally overcoming some form of market failure. In this context, a well-organized set of policies is usually more effective in achieving a policy goal than a single policy. Furthermore, potential synergies may exist among policies aimed at different environmental objectives and sectors. Energy, environmental, and industrial policies and their integration may provide important opportunities for fuel cells and may, in fact, be a fundamental enabling factor for their introduction.

Other issues requiring consideration in defining a possible intervention strategy include:

- Relationships between incremental costs and benefits to the global environment;
- Opportunity costs of alternative GHG reduction methods;
- The value of potential benefits other than GHG reductions;
- Long-term and short-term economic, environmental and social goals;
- The levels of uncertainty that arise over long timeframes and how to manage them; and
- Project-level considerations.

FINANCING MODALITIES

Policies that could affect the widespread introduction of fuel cells fall into three broad categories of market-based, regulatory, and voluntary measures, shown in Table 1.7.

Table 1.7 Policies Affecting the Introduction of Fuel Cells

Market-Based Instruments	Regulatory Instruments	Voluntary Measures
• Taxes and levies • Subsidies • Tradable permits	• Government targets • Standards • Energy market restructuring • Sales mandates for manufacturers	• Self-imposed manufacturer standards • Consumer self-discipline as a result of education

Source: The Center for Energy Policy and Technology Imperial College of Science, Technology and Medicine 2001.

The International Energy Agency and its member countries have established an "Advanced Fuel Cells Implementing Agreement". Russia is not currently party to this agreement, but Russian participation could potentially enhance collaboration on fuel cell designs, benefiting both sides. Table 1.8 describes the active annexes to this implementing agreement.

Table 1.8 Advanced Fuel Cells Implementing Agreement Annexes Active in 1999–2003

XI PEMFC	XII Stationary	XIII SOFC	XIV MCFC	XV Transportation
The aim is to contribute to the identification and development of techniques to reduce the cost and improve the performance of PEMFCs as well as PEMFC systems. The tasks address three areas: - New materials - Balance-of-Plant issues - Direct Methanol Fuel Cells	The aim is to verify the market possibilities for fuel cells in various stationary applications. PEMFC, MCFC as well as SOFC will be included. The tasks relate to the following areas: - Fuel cells for residential customers - Fuel cells for large buildings - Fuel cells for power generation	A number of workshops will form the basis of the collaborative work. Special emphasis will be given to material issues as well as modelling of systems. Four sub-tasks have been identified: - Low-cost manufacture and design - Low-temperature operation - Balance-of-plant and systems modelling	The aim is to provide international collaboration in the research and development of certain aspects of MCFC technology in order to improve its economics and effectiveness for power generation. The work addresses: - Stack performance and endurance - Test procedures and standardisation - Development of Balance-of-plant technology	The aim is to undertake economic analyses, system analyses, life cycle analyses and the analysis of fuel supply systems based on the needs of users and authorities as well as the results of other tasks in the IA. The work is expected to include: - Economic and system analysis - Balances of life cycles - Fuel supply systems

POSSIBLE SYNERGIES IN MARKETS AND APPLICATIONS

Developing a variety of applications, market mechanisms and policies could result in synergies that will facilitate the introduction of fuel cells.

These synergies could take on a number of forms including simple cost reductions, increased public awareness, and improved infrastructure development. The manufacture of similar fuel cells for different systems can create economies of scale and help transfer knowledge. Benefits of mass production include bulk purchase of materials, lower unit costs, the potential for interchangeable spare parts, and transferable engineering know-how. Synergies in markets could also be exploited at a geographic level through creative manufacturing, systems integration, and servicing arrangements.

WORKS CONSULTED

Arthur D. Little. 1998. *Profiles of Leading Renewable Energy Technologies for the Massachusetts Renewable Energy Trust*. Cambridge, Massachusetts. Also available on the Internet: http://www.mtpc.org/massrenew/Doc2part1.pdf.

E4Tech. 2001. *Global Fuel Cell Decentralised Generation Market Assessment. Preliminary Report on Task 3.1.* United Nations Development Program and Global Environment Facility, London.

The Center for Energy Policy and Technology Imperial College of Science, Technology and Medicine. 2001. *Fuel Cell Policy Climate Assessment. Preliminary Report on Task 3.2.* United Nations Development Program and Global Environment Facility, London.

RAO EES. 2001. “Reforming RAO EES”. *Newswire.* At http://raoreform.elektra.ru/raoreform/.

W. Peter Teagan (Arthur D. Little). 2001. “Technology Readiness.” Presentation at *Fuel Cell Power Generation in Developing Countries: Opportunities and Market Intervention Strategies, May 22-23, 2001, Paris, France.* United Nations Development Program and Global Environment Facility, Paris.

CHAPTER 2: OIL AND GAS INDUSTRIES

INTRODUCTION

This chapter addresses the potential applications for fuel cells in the Russian oil and gas industries. It begins by examining the structure of the petroleum industry with an overview of the production process. Discussions include various aspects of the industry power requirements such as metering, transportation, personnel housing needs, cathode protection, and fuel availability. A similar, though less developed, analysis is given for the Russian gas industry. Possible market size is estimated based on current industry characteristics and proposed structural changes.

This chapter does not seek to examine every possible use of heat and power in the oil industry, but rather focuses on applications in which fuel cells might have an advantage. These are primarily off-grid applications requiring low volumes of power. A Russian oil and gas industry expert interviewed industry managers and designers and collected data on power equipment purchases for these applications. The authors then developed a short list of potentially viable fuel cell applications in the oil and gas industries by comparing existing power system costs and benefits with those of fuel cells. One of the important messages learned during the interviews is that oil companies are most interested in investing in new technologies for new pipelines, although in certain instances, they would consider installing fuel cells at existing production sites and pipelines. It is typically much less expensive to introduce technological improvements in the design stage than after equipment is installed. Thus, this chapter focuses on opportunities at new facilities, but for context, the chapter also provides information on existing oil production systems.

Initially, cost will likely be just one of several factors that oil companies consider when evaluating fuel cells. Oil companies may want to begin by purchasing a few pilot units to learn about the technology and keep up with competitors. They will also likely consider reliability and ease of use, which are critical to proper operations and cost control in the Far North. Noise, pollution and safety may also be factors in some applications, though they will not likely be primary decision factors.

THE RUSSIAN PETROLEUM INDUSTRY

Russia's economy depends significantly on raw materials exports, especially crude oil. Russia produced 6.71 million barrels of oil per day in 2000, two-thirds of which it exported. The Russian oil industry realizes that it has competition from around the globe, so it is interested in improving its operations and efficiency.

Oil Production

Russian oil production in 2000 totaled just over 323 million tons.[1] Higher world oil prices 2000 encouraged greater production from existing oilfields and the development of new fields in ever more remote locations.

Oil production over the last decade occurred mainly at existing oilfields. The oil extraction process involves several stages, including:

- Exploration;
- Construction; and
- Extraction.

Oil extraction sometimes involves increasing pressure in the oil reservoir by pumping water into the oil.[2] Russia's oilfields are also exploited using a mechanized method with the help of sucker-rod pumps, electric rotary bottom hole pumps, and gas lift.

Russia's petroleum producers vary in scale, ownership, and maturity. Table 2.1 describes Russia's oil producers and their production volumes in 1999.

Table 2.1 Major Oil Companies in Russia

Company	Oil extraction in 1999, thous. tons	Notes
LUKOIL	63,371	Including KomiTek, LUKOIL-Perm, RITEK, LUKOIL-AIK
YUKOS	44,719	Including East Oil Company
Surgutneftegas	37,573	
Tyumen oil company	36,872	Including Chernogorneft (TNK-Nizhnevartovsk), Kondpetroleum (TNK-Nyagan) and ONAKO
Sidanko	8,224	Controlled by British Petroleum
Tatneft	24,448	Controlled by the government of Tatarstan Republic
Sibneft	16,322	Controls Slavneft cash flows
Bashneft	12,261	Controlled by the government of Bashkortostan Republic
Rosneft	12,554	Federally owned
Slavneft	11,930	Federally owned (10 percent shares belongs to Belarus)
RAO Gazprom	9,915	Controlled by the Federal Government
Small enterprises with Russian investments, total	9,244	
Small enterprises with foreign investments, total; incl. those extracting more than 500,000 tons/year	21,012	

Source: Vladimir Ivanov, Russian Auditor Company (a financial and technology company services the oil and gas industries).

[1] According to the Russian Federal Balance of Reserves, as of January 1, 2001, 1,223 oil, oil-and-gas, and oil-gas-condensate deposits were under development.

[2] This method is of limited use in other oil exporting economies, but is standard in Russia.

The majority of active oilfields are located in just a few regions of Russia[1]:

- Western Siberia (the Mid Ob, Northwestern Siberia), where the majority of oilfields and extraction capacities are located;
- Timano-Pechorskaya Province (Komi Republic, Nenetskiy Autonomous County), where considerable oil reserves have been found, but extraction volumes are insignificant;
- North Caucasus (practically exhausted);
- The Volga area (Tatarstan, Bashkortostan, and Udmurtia Republics, Samara and Perm Oblasts), where the extraction has entered its final stage and oil quality is low. The oil produced in these regions typically is heavy and has high sulfur content;
- The Lower Volga (Saratov Oblast, the Caspian area, Orenburg Oblast), where reserves are small, the data are not reliable, or extraction is difficult because of depth and high sulfur content;
- Sakhalin Island offshore deposit, where oil extraction with participation of foreign capital has just started.

Several local companies are also involved in oil extraction, but these do not play an important role in the broader oil market.

Twenty-eight large oil refineries supply oil products to Russia's domestic market. These refineries are capable of producing only about 60% of the petroleum products created in a typical advanced refinery. All of the large refineries are located in the moderate climate zone in regions with well-developed infrastructure.

Oil Consumers

One third of Russia's petroleum output is consumed domestically. Since domestic petroleum prices are not free floating, the Interagency Commission for Export strictly regulates the ratio of oil supply on the domestic and foreign markets at the federal level.

Transport of Crude Oil and Petroleum Products

Oil extraction, refining, and transportation in the former Soviet Union were developed as an integrated system, which was decentralized through privatization between 1992 and 1995 and the creation of vertically integrated oil companies. However, oil transportation is considered a natural monopoly and continues to be controlled by the state.

Eighty-five percent of Russian oil is transported through a system of East-West pipelines that connect the major oilfields with oil refineries and ports: Ventspils (Latvia), Butinge (Lithuania), Novorossiisk (Russia), and Tuapse (Russia). Pipeline transportation is also used to supply oil to Central and Western Europe (Slovakia, Romania, and Germany). These pipelines belong to the federally owned joint-stock company, AK Transneft. See Appendix 2.A for a complete layout of Transneft oil pipelines.

[1] Russia's ten leading oil companies have 827 licenses for oil extraction, including 8 licenses for unique oilfields.

Approximately 350,000 kilometers of oil pipelines operate in Russia. Approximately 100,000 kilometers of these are located in Western Siberia. These pipelines experience approximately 50,000 accidents a year, resulting in spills of oil products and related liquids. The average oil pipeline in Russia has been in operation for approximately 80% of its useful life. These pipelines experience on average 1.5-2.0 ruptures and/or leaks per kilometer each year[1]. Petroleum companies use railway transportation only in the East (Khabarovsky and Amursky oil refineries, and China), and also for some export deals to preserve oil quality.

High-quality oil products such as high-octane gasoline, low-sulfur diesel, and residual oil are transported from oil refineries to end-users by railway and automobile transport. Lower quality products, including low-octane gasoline Ai-80 and standard diesel fuel with sulfur contents of up to 0.2%, are transported from oil refineries to large oil storages tanks through pipelines that belong to the federally owned joint stock company Transnefteprodukt.

Transnefteprodukt, a petroleum transportation company, operates 19,500 kilometers of pipelines. Approximately 65% of these have been in operation for more than 20 years. Only 15% of petroleum pipelines are equipped with remote control devices. The Russian Ministry of Energy has stated that up to 2,500 kilometers of these pipelines must be renovated in 2001-2005. Renovation will include the installation of automatic controls, remote control devices, and anti-corrosion equipment.

Oil Industry Electricity Supply

Normally, oilfield exploration is performed with the help of stand-alone equipment, which uses diesel motors for either direct generation of mechanical energy or electricity generation. Low-capacity stand-alone diesel power plants are used to provide electricity at the first stage of oil well construction and infrastructure development, before power networks are installed. Often, gas turbine power stations such as the following are installed to provide base load power generation:

- PES-2.5 and PES-4.0, with a capacity of 2.5 and 4.0 MW respectively, manufactured by the Production Union Iskra, Perm;
- GTE-6 and GTE-16 with a capacity of 6 and 16 MW respectively, manufactured by Turbomotorny Zavod (Turbine and Motor Plant) Joint Stock Company, Ekaterinburg;
- Titan-130 gas turbine power plants, with a 10 MW capacity, produced by the U.S. company Solar Turbines;
- Gas turbine power plants produced by others such as Rybinskiye Motory, and manufacturers in Ufa, Samara, Moscow, Kazan, and Nikolayev (Ukraine) are used in rare instances.

Appendix 2.B provides a list of additional turbine manufacturers with sales in Russia.

Western Siberia, where most of Russia's oilfields are located and which is served by Tyumenenergo power utility, has significant unused generation capacity, including a large

[1] Information provided by the Russian Ministry of Energy.
[2] This method is of limited use in other oil exporting economies, but is standard in Russia.

Surgut co-generation plant. This is because the regional power supply system was designed to provide power for the extraction of up to 500 million tons of oil per year, however, current extraction is only approximately 50% of this amount per year.

Energy Costs in the Oil Industry

Currently, the share of energy costs in oil extraction and preparation varies for different oil companies. Table 2.2 provides information on these costs. These data show that electricity accounts for 5% to 15% of the costs of producing crude oil. The wide range stems from differences in efficiency and in electricity tariffs. On average, 100 kWh of power are needed to produce a ton of prepared oil in Russia.

As mentioned above, these costs basically involve power supplied by the electricity grid, and only a minor share comes from on-site gas turbine and diesel generators. Importantly, since official statistics of oil companies often include on-site generation and consumption costs in overall oil extraction costs, they are difficult to separate.

Table 2.2 Energy as a Percentage of Production Costs

Oil company	Energy as a Percent of Production Costs
Bashneft	14.7
Eastern oil company	9.7
ONAKO	5.3
Rosneft	4.3
Sibneft	8.5
Slavneft	9.0
YUKOS	10.3

POTENTIAL APPLICATIONS FOR FUEL CELLS IN THE OIL INDUSTRY

Electricity Supply to Pipelines Connecting Oilfields

Within individual oilfields, pipelines connect multiple-well platforms to central oil preparation points. Typically, these pipelines are approximately 3 kilometers long per oil well but the exact length depends on the respective locations of the oilfields and Transneft's flow meters. In total, there are up to 350,000 kilometers of pipelines connecting oil fields in Russia, including approximately 40,000 kilometers of extremely long pipelines. All these pipelines must be supplied with electric driven safety valves located at 15-kilometer intervals according to safety rules.

Power lines have in the past been built along oil pipelines to ensure the proper operation of these safety valves; this would considerably increase capital costs, of course. Today, there is a new alternative: using independent power sources both for safety valves and for cathode protection stations. This issue is less pressing with oil mains because power transmission lines are traditionally built along oil mains.

Electrified Pipeline Safety Valves

Water-and-oil emulsions and processed oil are transported between oilfields using pipelines, which in essence form "the circulatory system" of the petroleum production industry. Any disruptions in this system can have a very negative impact on the economic performance of oil companies. For example, damage to the pipelines that causes oil spills and environmental pollution means significant additional costs to the pipeline owner for soil restoration and payment of penalties. Given the lack of insurance in Russia to cover this risk, these additional costs could potentially bankrupt a business.

There are regulations designed to protect the environment from large-scale pipeline spills. These regulations require that electrified safety valves be installed along pipelines at 15-kilometers intervals. These valves are closed when the pipeline operator sends a signal.
Pipelines go through undeveloped land, often in swampy areas that are prevalent in the tundra. Typically, pipeline owners must build power transmission lines along the pipelines in order to supply power to these valves. In swampy areas, this requires capital investments of approximately $160,000 per kilometer, over $1 million per valve.

These costs could be avoided by replacing power transmission lines with highly reliable, quick starting independent power sources. Such power sources could consume liquid fuel. Fuel consumption would be negligible because the valves would be operated only in extremely rare cases. The electric drives at the valves have a power load of around 50 kW. Fuel cells are one such source of independent power, although they will likely need to compete with other technologies such as microturbines and small conventional generators.

According to preliminary estimates, Russia's oil extraction industry may need up to 20 such remote energy sources per year, particularly given the development of new oilfields located 100-200 kilometers from the main transmission pipelines. Because such independent power sources would offset huge capital investments, their initial capital costs could be as high as $2,000/kW[1] and remain competitive with the existing sources.[2]

Cathode Protection Stations

Cathode protection involves supplying DC electricity to cathodes along the pipeline to combat pipeline corrosion. Currently, rectifiers and overhead alternating current transmission lines are used to provide power for this purpose. Fuel cells could be used in this application, supplying DC to cathode protection stations, which are located at 10 to 20 kilometer intervals along the pipeline. The costs of such transmission lines are similar to the costs for lines that supply power to safety valves. The average capacity of power sources for cathode protection stations is 10 kW.

---

[1] Based on the capital costs of the main equipment only. Shipping, installation, auxiliary equipment and operation and maintenance are not included.

[2] The experts who participated in this study estimate that fuel cell market opportunities in this market could be as large as $1-2 million annually.

Metering Applications

Real-time metering and monitoring is essential to cost-effectively manage oil production. Supervisory Control and Data Acquisition (SCADA) monitoring systems provide information on the rate of oil, liquid, and gas extraction; the amount of water pumped; temperatures; and pressures. SCADA monitoring points generally draw up from 1 to 10 kW of power. Major oil fields may have over 3,000 such points, depending on the total number of multiple well platforms.

A power transmission line goes to each oil well cluster to provide basic power supply. A separate line from an independent power source or an uninterrupted power supply (UPS) provides reserve power. The principal advantage of fuel cells, as compared to the more common UPS using accumulators is that fuel cells can have a much longer operating time between shutdowns. This longer operating time helps to bring down the energy distribution system repair costs considerably. The power demand must be such that the fuel cell would need to operate enough hours for the costs to make economic sense. This is because typical power sources provide 200 W/h/kg, while fuel cells generate over 1,000 W/h/kg. Appendix 2.D provides prices for UPS systems (including VAT) on the Russian market. Like UPS, fuel cells would also need to heat the metering equipment shelters to ensure proper operation of the equipment.[1]

A separate but related application is to provide power for oil well flow metering equipment. Fuel cells can use oil well gas skimmed to meter oil well flow. Fuel cells may have an advantage over traditional technologies in this application because fuel cells produce heat, which can heat the metering units with a minimum of exhaust gases. The lack of combustion in fuel cells will also minimize the risk of explosions in this flammable environment. The Russian Federation will be replacing up to 10,000 such metering units within the next 5 to 15 years. These replacements could possibly be made with 2-5 kW fuel cells. This would avoid the need to build new power grids.[2]

Energy Supply to Remote Villages and Settlements for Seasonal Workers

As oil fields are developed in the North, petroleum companies build settlements to house the seasonal oil workers who rotate in and out. Existing villages are also sometimes located within the oil companies' areas of operation in northern Russia.

In existing worker settlements, small boilers and gas turbines or diesel generators supply power using diesel or oil well gas. Such power and heat supply systems are typically inexpensive to install but very expensive to operate because they have short lives, their repair costs in this harsh climate are high, and they are inefficient. Most worker settlements house from 100 to 600 people and need 60 to 200 kW of power capacity. Most of this electricity is for lighting and electric heating. When all costs are taken into consideration[3], it currently costs about $3000/kW

[1] The potential size of the UPS fuel cells market may be up to US$1 million, but fuel cell costs would need to come down to tap the full potential.

[2] If fuel cells prove reliable and applicable for this application, and their initial capital cost were under US$1,000/kW (not including auxiliary equipment, shipping or installation), there could potentially be a market for fuel cells in this industry. Annual sales could possibly reach 500 to 1,000 units, with a gross value of up to US$4 million.

[3] These costs include heat and power equipment, heat pipelines, reserve diesel fuel supply and fuel pre-heating systems.

to supply worker settlements with energy. These very high costs of energy supply to settlements of periodic workers provide favorable conditions for fuel cells power units using either natural gas or methanol.[1]

Around 10 to 15 oil field worker settlements are built annually in the Russian Federation. Each settlement usually has two to five groups of apartment buildings. In worker settlements for new oilfields (for example, in Timano-Pechora, Yamalo-Nenetsky Autonomous County, or Yakutia Republic), oil companies would like to build cost-effective, highly-efficient power supply systems, but they also want quieter systems with simple, reliable operations. Noisy environments are a major worker complaint, and fuel cells might have an advantage in this area over existing technologies. Moreover, decentralizing the energy supply so that each building or group of adjacent buildings had its own heat supply would likely increase reliability by reducing the external heat pipes. In the Far North, such pipes require extensive maintenance and tend to fail frequently.

Other Northern villages with no connection to the oil industry have similar power requirements. Such villages are typically poor and many have shrinking populations. Today, many centralized energy generation facilities in these villages have been decommissioned and small, localized diesel generators provide power. Diesel fuel for these generators very expensive because it must be brought in by river or across the tundra. Because of the economic constraints, fuel cells would only be an option when a village is planning to buy a new power supply system and when fuel cells are cost-effective compared to the other options.

Vehicles Supporting the Petroleum Industry

Fuel cells are not yet commercially available for cars, trucks and other land-based transportation application. This section focuses on the potential future demand for fuel-cell powered vehicles in the oil industry when such vehicles do become available. Such vehicles will also need to function well in the harsh climate of the Far North if this market is to materialize.

The petroleum industry relies on motorized vehicles for oil well maintenance, capital repairs, and transportation of materials and reagents. Transportation vehicles are also essential for building the infrastructure of the petroleum industry in the Far North, which includes roads, power transmission lines, pipelines, and other facilities. Diesel trucks are the vehicles of choice such tasks.

Most oil company motor vehicles travel only short distances during the harsh winter months, typically not more than 200 kilometers per day. In the North, diesel vehicles tend to run continuously in the winter (or for about 9 months straight). This is essential because with the extreme cold temperatures the vehicles could not start up again once shut off.
All-weather cross-country vehicles for transporting workers are another important component of the transportation system serving the petroleum industry. These vehicles are typically vans made from Ural-brand trucks. The vans are heated and their motors must be reliable because

[1] In this application, the total annual market for fuel cells power units could be as high as US$200,000 to US$300,000; the experts involved in this assessment assumed that the majority of energy for worker settlements will still be supplied with traditional equipment.

breakdowns could expose workers to life-threatening cold. This risk could be significantly reduced if fuel cells were available to heat these trucks efficiently.

There are around 30 oil companies in Russia, and each has an average fleet of 20 to 40 diesel vehicles. Total fuel consumption to keep diesel motors working in wintertime equals about 2,000 tons; this fuel must be delivered in the summer. The costs of renovating the fleet of vehicles are also very large.

When fuel cells in vehicles become commercially available, there may be a potential market for them in the Russian oil industry. Potential advantages of fuel cells include the ability to consume locally available fuels instead of diesel, high efficiency, and durability. The lack of moving parts would also likely minimize breakdowns in the winter months. A key problem that fuel cells will face, though, is the low capital cost of diesel motors.

About 30 percent of the vehicles serving the petroleum industry in the Far North are replaced each year because of the wear and tear from the harsh climate and high turnover can facilitate the introduction of new technologies.

Summary: Applications for Fuel Cells in the Oil Industry

The advantages of fuel cells compared to traditional sources of power generated using fossil fuels are as follows:

- Improved efficiency in transforming chemical energy into power;
- Smaller size;
- Fast construction;
- Easy maintenance;
- Large percentage of capacity available for service;
- Long lifecycle;
- Lack of noise;
- Load flexibility.

However, there are also some disadvantages such as high capital costs and the lack of production models available for installation. If hydrocarbons are used as fuel, the fuel must first be reformed to produce hydrogen. This reforming process is done at a high temperature and requires active catalysts.

In the oil extraction industry, fuel cells may be used in the Far North for:

- Energy supply to autonomous metering equipment in oilfields and as reliable source of power for metering equipment where there are power transmission lines (to replace accumulators and low capacity diesel energy sources);
- Energy supply to support oil pipeline safety systems (electric safety valves);
- Electricity for work settlements and small villages located in territories developed by oil companies;
- Power supply to cathode protection stations of all pipelines;

- Energy supply for motor vehicles (to replace vehicles with internal combustion diesel engines).

THE RUSSIAN GAS INDUSTRY

The gas industry in Russia is run as a monopoly. Gazprom and its subsidiaries develop all natural gas deposits and supply natural gas to domestic and foreign consumers through a system of gas mains, which Gazprom owns. Independent gas producers have no access to this network. Gazprom is a joint-stock company, controlled by the Russian federal government. It also has foreign shareholders including the German companies Ruhrgas and Winterschall and the Italian company ENI. Gazprom subsidiaries market the gas, along with a few, select companies including Mezhregiongas (domestic sales) and ITERA Corporation, which markets the gas to other countries of the former Soviet Union.

Extensive natural gas reserves supplement Gazprom's gas production to ensure sufficient supply for export and domestic demand. Gazprom's production divisions are currently developing 69 gas fields. The company has 8,990 gas wells and 552 oil wells at its disposure. Seventy-two gas-processing plants prepare the extracted gas for long-distance transport. These plants are equipped with 47 boosters, and the total power load of the gas pumping units is 2.1 million kW.

Natural gas mains are the basic arteries supplying gas to the Russian and European markets. Gazprom owns a network of high-pressure gas pipelines totaling 148,800 kilometers in length. It operates 4,029 gas-pumping units at 247 compressor stations; the total power load of these units is 41.7 million kW and 84.7% of these gas-pumping units are based on gas turbines. The potential throughput of Gazprom's gas transportation division increased significantly after the company commissioned almost 600 kilometers of new gas pipelines and 6 compressor stations with a total power load of over 360 MW.

Gas Production Technology

Like oil production, natural gas production primarily takes place in Russia's Far North. This is mostly on the Yamal Peninsula.

Natural gas production technology is much simpler than that for oil production. The major capital investments for developing natural gas deposits focus on infrastructure development: roads, pipelines, and compressor plants. Because gas well sites are much larger than oil well sites and they have larger flow volume, a settlement for periodic workers is set up near each gas well cluster. Gazprom also sets up such settlements near gas main compressor stations.

Currently, 157,000 kilometers of gas pipelines operate in Russia, of which 35% are more than 20 years old. The Russian Ministry of Energy estimates that 4,000 kilometers of gas mains will need to be renovated or repaired by 2003, which might provide an opportunity to introduce new technologies.

Gas turbines provide low-cost power for compressor stations along the gas pipelines. Fuel cells will not likely compete in this market in the near term because of their high costs.

The most natural application of fuel cells at Gazprom would likely be energy supply to cathode protection stations during repairs, renovations, and construction of new gas mains. Until recently, the Canadian company Global Thermoelectric dominated this market, supplying lead telluride thermoelectric generator technology to practically all oil and gas companies. The 3M Corporation originally developed this generator technology in the 1960s for the Apollo space program. Global Thermoelectric has recently developed an SOFC technology for this application. It is possible that this application may become the first market niche where fuel cells are widely applied in Russia. Sales would depend on the new gas pipeline construction rate, which is difficult to predict given the potential breakup of Gazprom in the next few years[1]. However, despite uncertainty about its future organizational and ownership structure, Gazprom is implementing a program to build on-site power plants. Over the last two years, Gazprom has built around 80 power units with capacities ranging from 2.5 to 4 MW.

Another potential niche for fuel cells in the gas sector is in supplying energy to Gazprom's information systems. A Gazprom tender committee recently awarded a contract to the firm IBS to develop an integrated information and management system, including power supply to the system. The total budget for developing this system is over US$1 billion. Of this total, US$150 million is being spent in 2001.

FUEL CELL MARKETING ANALYSIS IN THE OIL AND GAS INDUSTRIES IN RUSSIA

Market Barriers

The market for power equipment in Russia is characterized by stiff competition among entrenched incumbents in competing technologies. Well-positioned competitors who focus on more traditional power technologies such as gas turbines and diesel generators dominate the market.

Apart from the higher costs for foreign-produced equipment, there is the issue of customs duties, currently at 20%. Additionally, a Value Added Tax (VAT) of must be paid on all foreign equipment delivered in Russia. However, in accordance with the Tax Codes, the VAT is reimbursed after the equipment has been commissioned. The only means of eliminating this barrier are to (a) establish a domestic fuel cell production capability and identify viable consumers to support that business proposition, and/or (b) support legislation giving preferential trade status to high-tech imports.

Equipment Decision-making

The design of energy supply systems for Russian oil and gas production facilities is viewed as part of the infrastructure development for a given deposit. Historically, as gas and oil deposits were developed in Soviet times, design companies were set up in the regions to develop the infrastructure. Such companies include Giprovostok (Samara), BashNIIproekt (Ufa), PermNIPI (Perm), RostovNIPI (Rostov-na-Donu), PechorNIPI (Ukhta), VNIIneft (Moscow),

[1] The Russian Federation is in the process of restructuring Gazprom. At present, the desired final structure and current timetable for completion is uncertain.

Giprotyumenneft (Tyumen), TomskNIPI (Tomsk), and Giprotruboprovod (Moscow). Some of these design and research institutions are responsible for designing both the deposit extraction infrastructure and the surrounding infrastructure.

Giprovostok and Giprotyumenneftegas have historically been the leading agencies. Presently, their position is much weaker. This is particularly true of Giprovostok. Independent design bureaus have been spun off from these institutions, often in the form of joint ventures. Canadian and U.S. firms, which have work experience in the Far North, have been most active in setting up joint ventures.

After the federal authorities confirm and approve the feasibility of the proposed solutions, the designers supervise implementation of the projects. Therefore, the designer and manager select the technology to be used. This role is particularly important when alternative solutions are available for the designer to consider.

Costs for Competing Generation Technologies

In order to understand the market potential for fuel cell applications in Russia, one must be able to accurately estimate the cost of competing technologies. However, estimating accurate production costs in the Russian oil and gas industries is not a straightforward process. When developing project cost estimates, firms tend to focus on capital costs to the exclusion of ancillary costs such as installation, operation, maintenance, fuel, and fuel transportation costs. Whereas this is not done uniformly for all firms, care must be taken to understand the assumptions made in the cost data. Moreover, costs in the Far North tend to be site-specific: the cost of transporting fuel and equipment varies significantly depending on the accessibility of a site and transportation is typically major cost of energy production in this environment.

Appendices 2.F-1 through 2.F-5 summarize data on costs for a variety of large-scale power technologies in the central part of Russia. While these costs cannot be directly compared with the costs of technologies that fuel cells would replace in the Far North, they do provide a point of reference for power generation costs in Russia more generally.

Marketing Approach

Successfully marketing fuel cells for the oil and gas infrastructure will require providing relevant information on the advantages and usability of fuel cells in the harsh climate of the Far North to Russian designers who are responsible for developing the infrastructure for these deposits.

One of the best ways to accomplish this desired information exchange would be to conduct an educational seminar in Russia. The city of Tyumen would be a good candidate to host such a conference. Tyumen has hosted many events of this type and has the necessary infrastructure to accommodate participants. Additionally the majority of designers who develop the oil and gas infrastructure, including those who previously worked at Giprotyumenneftegas, are located in this city. It would also be useful to invite the top management of oil companies and Gazprom, as well as representatives of firms that are currently or potentially involved in fuel cell production. The seminar could be used to:

- Provide an opportunity to present concrete projects;
- Invite the participants to take part in projects to demonstrate the use of fuel cells in the oil and gas industries in Russia;
- Discuss the issue of reducing the cost of fuel cell design and production through the establishment of independent firms in Russia.

The importance of providing detailed knowledge of concrete fuel cell applications is supported by the fact that some designers maintain personal contact with their colleagues in the leading world oil corporations. Through such contacts, Russian designers learn about and introduce new technologies in Russia, especially in the infrastructure design for complicated and remote deposits[1].

In the oil industry, special design bureaus are responsible for designing such infrastructure. An example of such a design bureau is Avtomatika in Novokuibyshevsk in the Samara Region. The natural gas industry has similar design bureaus. However, their personnel often lack essential information on modern technologies, and they are, therefore, slow to incorporate progressive, new approaches. Introduction of new technologies is only possible if designers are actively involved.

Promotion Strategy

The market research prepared for this assessment indicates that promoting fuel cells-based commercial power units on the Russian market may be most successful by combining two approaches:

- Launching a large-scale information campaign in Russia. This may start with a workshop for oil and gas industry designers and engineers. Tyumen city may be a good location for such a workshop, given its proximity to the Russian oil industry's design and research organizations. The workshop could be promoted or organized by a local design organization such as the Tyumen branch of TryOcean TERM, Ltd. or Giprotyumenneftegas.[2]

- Implementing a project to demonstrate the use of an industrial fuel cell in a residential or office building, which would provide potential buyers with access for monitoring and visits. Such an installation could demonstrate the applicability of fuel cells to meet the complete range of energy demands in, for example, worker settlements.

---

[1] For example, some feasibility studies submitted to the tender for developing the Val Gamburtseva deposit, which took place in Nariyan Mar on April 4, 2001, included proposals for fuel cells to supply energy to the Gamburtseva-Usa pipelines safety valves.

[2] Contact information for these organizations is as follows: Giprotyumenneftegas, Rafail Petrovich Kirshenbaum, General Director, Respubliki St., 62, Tyumen, 625000, Russia; Tyumen branch of TryOcean TERM, Ltd. Victor Nikolayevich Evstratov, Director, Ordzhonikidze St., 9, P.O.B. 5115, Tyumen, 625000, Russia.

Such a demonstration project would allow the sponsors to demonstrate to consumers the advantages of available and cost-effective fuel cells as compared to either low-capacity diesel power plants or installation of power supply networks.

CONCLUSIONS

Many possible applications exist for fuel cells in the Russian oil and gas industry. These include potential applications in the areas of safety, metering, distributed power, uninterrupted power supply, housing, and transportation. If the area of safety, fuel cells can be used for powering pipeline safety valves that are located along the length of the pipelines. For metering, fuel cells can be used as uninterrupted power supplies to supply power for monitoring production in remote off-grid production areas and for cathode protection. Housing for workers require electricity and heat, both of which could be supplied by fuel cells.

A marketing campaign could be undertaken to involve the individuals who design and make decisions on the Russian oil field infrastructure. These players are key to introducing new technologies into the oil and gas production process. Market niche applications, primarily in the areas of metering power, UPS, and remote housing are possible but the true potential will become clear only after a rigorous analysis of competing cost structures reveals the true cost of competing generation options.

WORKS CONSULTED

Belousenko et al. 2000. "From the Gas Industry Energy to the Russian Energy Sector." *Gas Turbine Technologies.* July- August 2000. p. 30. *In Russian.*

Gazprom. 1999. *Electric Generators: Equipment Recommended for Installation in Gazprom Facilities*. Moscow. *In Russian.*

JSC Bryanskiy Car Factory. 2000. *Electric Diesel Station*. (Brochure for the Powertek Expo 2000).Bryansk, Russia. *In Russian.*

"Key Results of the Federal Energy Commission (FEC) of the Russian Federation in 2000 and Short-term Objectives. FEC Internal Reports for 2000." *Energy Managers.* Vol. 21. 2001. *In Russian.*

Kuznetsov's Samara Scientific Research Complex. 2000. *NK-900E Block-Modular Heat Power Station*. (Brochure for the Powertek Expo 2000). Samara, Russia. *In Russian.*

Osobov, V. and I. Osobov. 2000. "Investment Attractiveness of the Gas Turbine and Vapor-Gas Installations Projects." *Gas Turbine Technologies.* January – February 2000. p. 30. *In Russian.*

Price, Stan. 1998. "The Small Turbine Marketplace." *Power Value*. Vol. 2, No. 4, July/August.

Siberian Branch of the Russian Academy of Sciences. 1999. *Russian Fuel and Energy Complex. Current Status and a Look Forward*. Edited by A.P. Merenkova. Novosibirsk, Russia. *In Russian.*

CHAPTER 3: THE MANUFACTURING AND POWER SECTORS

Low energy costs are usually very important to most manufacturers because of the large amount of energy they consume. Fuel cells are a comparatively expensive source of energy, yet niches may exist for fuel cells where their reliability and other attributes could be important selling points. The most competitive application for fuel cells in the manufacturing sector will likely be for reliable back-up power. Even brief power outages can cost manufacturers hundreds of thousands or even millions of dollars. For example, outages at some metallurgical plants can cause the metal to solidify in the production equipment, destroying the equipment and millions of dollars of materials in a short time. The fact that fuel cells produce direct current (DC) power could also be an advantage in some applications by limiting the need to purchase costly converters. Finally, in some settings, the low or zero emissions of fuel cells could also be important selling points.

METALLURGY

There are several potential applications for fuel cells in the metallurgical sector. In particular, replacing conventional back-up power sources with fuel cells in ferrous and non-ferrous metallurgy may have good prospects. A second potentially profitable application is to use hydrogen extracted from coke-oven gas to produce power with fuel cells.

Back-Up Power

Russian metallurgical companies are major power consumers, and on the whole, these companies are profitable and even expanding capacity in some areas. Total installed power in the metallurgical sector is up to 800 MW, although the main power company, RAO-EES, owns some of this capacity. Metallurgical companies buy 10-20 MW of power generation equipment annually.

In many metallurgical plants, when the metal is melted in converters, refining furnaces, or mixers, large accumulator batteries are used to supply back-up power to DC electric drives, which can then reliably evacuate the molten metal during accidental grid power outages.[1] Replacing these batteries with fuel cells would be very cost-effective because these accumulators are used only on extremely rare occasions yet they have a limited operating life. Because electric drives use DC, in these cases fuel cells may be used without AC/DC converters, reducing the cost by 30 percent.

The average capacity of these electric drives is 20-50 kW. If powered by fuel cells, the fuel cells could operate on methanol (methyl alcohol), which is easy to store and relatively inexpensive. Using hydrogen as the fuel would eliminate the need for a fuel processor, which would reduce costs by another 30 percent. Many steel mills now produce hydrogen from coke-oven or blast-furnace gas.

[1] This is true for copper, nickel, alumina and iron production.

Currently, at least 50 such drives are used at Russian non-ferrous metallurgy plants that produce copper, nickel, and cobalt. These drives need independent reserve power sources. The average cost of accumulator batteries is around $400/kW[2] and their operating life is limited to about 2 years. Fuel cell costs could be reduced significantly because an AC/DC processor would not be needed and fuel cells are likely to last at least five times as long as accumulator batteries. Given these factors, this application might present an opportunity for up to $750,000 in fuel cell sales.

Similar but higher capacity reserve power sources are used in ferrous metallurgy. Fuel cells could also compete in replacing accumulator batteries for back-up power supply to auto-loaders. Auto-loaders may be used instead of both trolleys and fork lifts in indoor warehouses because they produce a low level of harmful emissions, and in outdoor warehouses because of the high efficiency with which they convert fuels into mechanical energy. AVTOVAZ, which produces electric trolleys and auto-loaders and sells many of them abroad, is considering producing PEMFC vehicles.

Hydrogen from Coke-Oven Gas

The steel industry is one of Russia's major exporters and is very profitable. The industry has an annual turnover of approximately $7 billion, producing over 53 million tons of steel and 40 million tons of cast iron annually. The major steel mills include the Severstal, Magnitogorsky, Lipetsky, Novokuznetsky, and Nizhnetagilsky plants.

The former Soviet Union used about 100 million tons of coal to produce coke for ferrous metallurgy in blast furnaces (Figure 3.1). A side product of coke production is coke gas. Every ton of coal produces about 300 cubic meters of coke gas. Coke gas contains 60 percent hydrogen, 30 percent methane, and 10 percent carbon monoxide, sulfur dioxide, and other gases.

About 15 billion cubic meters of hydrogen could be extracted from coke gas. Some steel works extract hydrogen using cryogenic purification, a very expensive process. Most steel works burn coke gas in their own combined heat and power plants (CHPs). At the same time, steel works consume significant amounts of natural gas to run their blast furnaces and CHPs.

[2] This cost covers capital costs for the main equipment. It does not cover shipping, installation, or ancillary equipment (equivalent to the balance of plant in a fuel cell).

Figure 3.1 Blast Furnace Fuel Supply: Traditional Layout

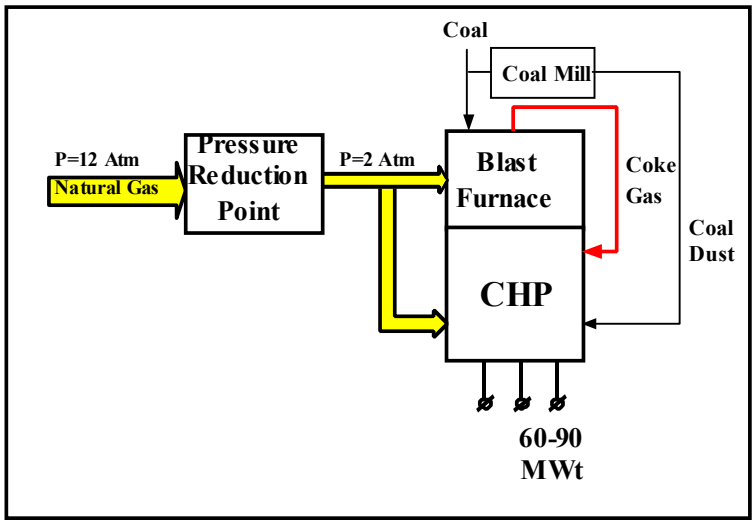

The fuel supply line for a blast furnace could be coupled with a Cryocor[3] expander to produce additional electricity using the natural gas pressure drop as natural gas goes from a high-pressure to a low-pressure system, and, as a side product, to provide refrigeration, which could be used for hydrogen extraction (Figure 3.2). The hydrogen could then provide fuel for a fuel cell.

Figure 3.2 Blast Furnace Fuel Supply with Fuel Cell: Layout with H_2 Extraction

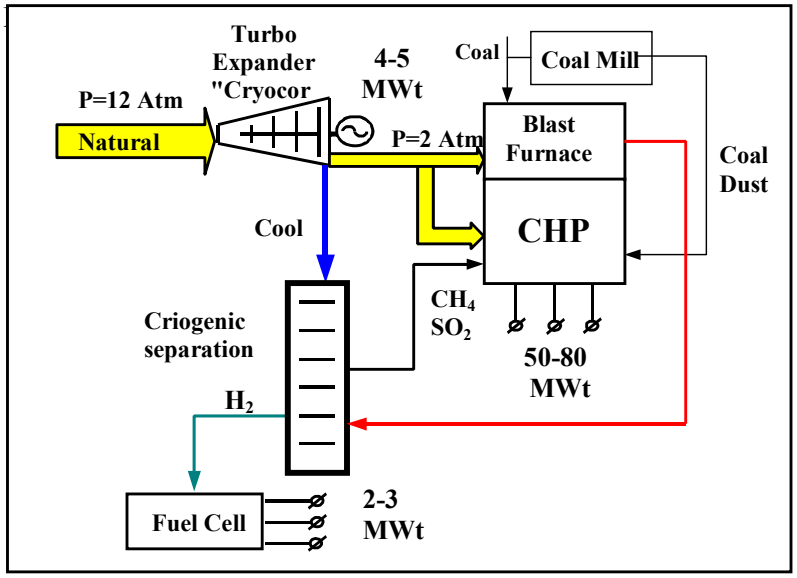

This very inexpensive hydrogen could be directed to the fuel cell energy unit to produce extra electricity for specific needs, such as an uninterruptible power supply systems (UPS). Pure

[3] Cryocor is a Moscow-based company specializing in cryogenic technologies and units combining cryogenic technologies with gas turboexpanders to produce power and cryogenic gases.

hydrogen would eliminate the need for a fuel processor, which accounts for a significant portion of the fuel cell cost.

SODA PRODUCTION

Pure hydrogen is a byproduct of soda production. Typically, the hydrogen is burned in special furnaces to produce heat. This hydrogen could be used in a fuel cell to produce heat and electricity.

There are more than 10 large factories in Russia that produce soda, high-grade potassium hydroxide, caustic soda, liquid chlorine, metallic sodium, and liquid, solid, and scaly caustic potash using electrolysis. Soda and caustic soda production totals about 2 million tons per year. Enough hydrogen is extracted in this process to produce about 50 MWt of electricity.

POWER SECTOR

The demand for new power equipment in Russian industry is relatively strong. However, it is not very likely that Russian energy utilities, particularly the main Russian power utility RAO EES, will develop an interest in fuel cells for base load power in the next several years. The reason is cost: traditional power generation equipment costs less on the Russian market than the available fuel cells. However, there is a segment of the power sector where fuel cells may become competitive in comparison to currently used engineering solutions, namely reserve power supply.[4] This technology was developed in Great Britain, and is being demonstrated in the U.S. to help stabilize energy supply in the West Sector of the Tennessee Valley Authority power network. Construction of a power unit based on regenerated fuel cells with the capacity of 12 MW has already begun. This project will cost $25 million. A similar power unit with the capacity of 14.75 MW incorporating 96 fuel cells is being built at an operating power plant in Little Barford, United Kingdom, near Cambridge. AGRA Birveico Ltd. will complete construction of this $20 million project in October 2001. REGENESYS regenerative fuel cells operate as a giant accumulator and store power when demand is low.

Russian power plants located in the Russia's European and Far Eastern regions, where there are no high capacity hydropower plants, would likely be interested in this technology if they had more information. Utility storage systems employing fuel cells, when fully implemented, could supply 1-2 percent of Russian electric energy, providing 10–15 percent peak load demand. The potential market is large if fuel cell costs come down to $1,500/kW. In the short term, it might be possible to negotiate a demonstration project with RAO EES.

WORKS CONSULTED

Energy: Numbers and Facts. 1998. Central Scientific Research Institute of the Ministry of Atomic Energy. Reference Manual H/16211/22. Moscow. *In Russian.*

[4] Electric power accumulation technology based on cadmium-nickel starter storage batteries can provide highly reliable power supply; accumulators can also boost power from the main power plant or smooth output voltage when loads are highly variable.

Golitsin, A.N. 1993. *Mobile Boilers Ready for Factory Use*. Institute for Residential and Communal Services. Moscow.

Industrial Application of Fuel Cells. 1988. VCP # SC-60519. *In Russian.*

Kozlovsky, A. and A. Salnikov. 2000. "Gazprom Energy". *Gas Turbine Technologies.* November-December. *In Russian.*

Meeks, Graham. 2001. "The UK Experience Reviewing the Regulatory Framework For Embedded Generation." *Cogeneration And On-Site Power Production*. Vol. 2, Issue 2, March-April.

Merenkova, A.P. (ed.). 1999. *Russian Fuel and Energy Complex. Current Status and a Look Forward*. Siberian Branch of the Russian Academy of Sciences. Novosibirsk. *In Russian.*

NK-900E Block-Modular Heat Power Station. 2000. Kuznetsov's LJSC Samara Scientific Research Complex. Exhibition Brochure. POWERTEK 2000, 14-17 March. *In Russian.*

Prices and Market. 1997. State Statistical Committee of the Russian Federation. Vol. 3. Moscow. *In Russian.*

Russian Federal Energy Commission. 2001. "On the Key Results of the Federal Energy Commission (FEC) of the Russian Federation in 2000 and Short-Term Objectives. FEC Internal Report for 2000." *Energy Managers.* Vol. 21. *In Russian.*

Office of Energy Efficiency and Renewable Energy and Office of Fossil Energy. 2000. *Strategic Plan for Distributed Energy Resources*. U.S. Department of Energy, Washington, DC.

EIA. 2001. *Country Analysis Brief. India*. Energy Information Administration Washington, D.C. Also available on the Internet: http://www.eia.doe.gov/emeu/cabs/india.html.

Energomash. 2001. JSC "Energomash Corporation." Company's Website: http://www.energomash.ru.

Energomashexport. 2001. Company's Website: http://www.energomachexport.com.

European Union. 2000. *A Fuel Cell Research, Development, And Demonstration Strategy For Europe Up To 2005*. Brussels, Belgium. Also available on the Internet: http://eva.wsr.ac.at/opet/fcstrategy.htm.

Eurostat 1998. "*External and Intra-European Union Trade." Statistical Yearbook 1958-1996*. Brussels, Belgium.

Fuel Cell Energy. 2001. *FuelCell Energy Partner to Begin Operating Direct Fuel Cell Power Plant In Germany.* Press Release. Fuel Cell Energy, Inc. Danbury, Connecticut. Available on the Internet: http://www.fce.com/#.

IEA. 1999. *Energy Policies of IEA Countries Finland. 1999 Review.* International Energy Agency. Paris, France. Also available on the Internet: http://www.iea.org/pubs/reviews/files/finland/index.htm.

IFC (International Fuel Cells). 2001. *UTC's International Fuel Cells To Deliver Three PC25 Power Plants To Sieco S.A.; First Fuel Cells In Latin America*. Press Release. Available on the Internet: http://www.ifc.com/news/archive/040901.shtml.

Industry of Saint Petersburg. 2001. *Power Engineering. JSC "Electrosila."* Available on the Internet: http://energy.internord.ru/articl_e/165030_en.html.

Interfax. 2000. *RAO EES Rossii Proposed to Modernize Power Plants in India*. Published on January 25, 2000. *In Russian*. Available on the Internet: http://www.sibene.elektra.ru/news/press/2000/jan_25.html.

Investment Herald. 1999. *Exports of Russian Power Engineering Equipment.* Published by Foreign Investment Promotion Center on January 11, 1999. *In Russian*. Available on the Internet: http://www.fipc.ru/fipctest/vestnik/glavy/jan_feb/Fourth.html.

Kotov, A.I. 2001. *Power Engineering Industry of St Petersburg on the Threshold of A New Millennium*. Administration of Saint Petersburg. Also available on the Internet: http://energy.internord.ru/articl_e/cont2_en.html.

KTZ. 2001. *Production Range and Specifications.* JSC "Kaluga Turbine Works." Available on the Internet: http://www.admobl.kaluga.ru/New/Industry/Engind/KTZ/productseng.htm.

LYCOS Network E-wire. 1999. *Anchorage Mail Processing Center to be Powered by World's Largest Commercial Fuel Cell System.* August 18, 1999. Available on the Internet: http://ens.lycos.com/e-wire/August99/18aug9909.html.

MAP. 1998. *Russian Market of Power Engineering Equipment*. Russian Ministry on Antitrust Policy and Market Support. *In Russian*. Available on the Internet: http://www.maprus.ru/market/en-equip.html.

Matur, A., S. Bali, M. Balakrishnan, R. Perumal, and V.S. Batra. 1999. *Demonstration of Coal Gas Run Molten Carbonate Fuel Cell Concept*. International Journal of Energy Research 23(1999): 1177-1185. Also available on the Internet: http://www.teriin.org/division/eetdiv/che/docs/abs01.htm.

Miller, W. 2001. *Hydrogen and Fuel Cell Energy for the Future Globe USA*. Presentation in the U.S. Congress on March 28, 2001. Washington, D.C.

MNES. 2001. *Annual Report 1999-2000*. Indian Ministry for Non-Conventional Energy Sources. New Delhi, India. Also available on the Internet: http://mnes.nic.in/frame.htm?publications.htm.

Pal, P. 2000. *Policy Measures to Promote Renewable Energy Technologies in India.* Tata Energy Research Institute, India. Available on the Internet: http://www.ne.jp/asahi/spena/energy-net/2000/papers/prosanto.htm.

Perkins, T. 2001. *Siemens Developing Solid-Oxide Fuel Cells.* Office.com, March 9, 2001. Available on the Internet: http://www.office.com/global/content/article/printme/0,3232,22717,00.html.

Polit.ru 2000. *Possibilities to Increase Russian Exports Are Exhausted Thinks Ministry for Trade*. Published on February 23, 2000. Web-based Russian News Channel "Polit.ru." *In Russian*. Available on the Internet: http://www.polit.ru/printable/183515.html.

Producer Center "DO." 1999. *JSC "Krasny Kotelshchik." Who Is Who in the City of Rostov-On-Don And Rostov Region. Information Materials*. Available on the Internet: http://www.icomm.ru/home/do/oglav/g5/krkotel/index.htm. *In Russian.*

R.G.E.Agencies Pvt. Ltd 2001. Company's Website: http://business.vsnl.com/rge_agencies/.

Russian Investors. 1999. Profiles of Russian Power Engineering Companies. Available on the Internet: http://www.investors.ru/4315.html.

Shukla, P.R., W. Chandler, D. Ghosh, and J. Logan. 1999. *Developing Countries and Global Climate Change. Electric Power Options in India*. Prepared for Pew Center on Global Climate Change. Washington, D.C.

Siemens KWU. 1999. Press release. Available on the Internet: http://w4.siemens.com/kwu/e/news/kwu014e.htm.

Technopromexport. 2001. Company's Website: http://www.tpe.ru.

UETM. 2001. JSC "Ural Heavy Power Engineering Works." Company's Website: http://www.uetm.ru/.

U.S. Coast Guard. 1999. *Marine Fuel Cell Analysis. Final Report. September 1999*. Washington, D.C.

Virtual Petersburg. 2001. *LMZ Finalized Industrial Results For 2000*. February 22, 2001. Available on the Internet: http://www.vp.ru/common/new_content/print_article.asp?aid=9412&ids=1&asID=9.

ZES. 2001. JSC "Zarubezhenergostroy." Company's Website: http://www.zes.co.ru/.

CHAPTER 4. SERVICE AND GOVERNMENT SECTORS

This chapter explores the potential for deploying fuel cells in the service and government sectors in Russia. Fuel cells show promise in the near- and medium-term for applications in residential buildings, in commercial facilities requiring uninterruptible power, in government buildings with large energy use, and in the transportation sector.

RESIDENTIAL SECTOR: LUXURY HOMES

Luxury summer homes, or dachas, are very fashionable in Russia. The average cost of a luxury dacha is about $100,000. There are more than 100,000 such dachas in Russia. The owners of these buildings usually use the most advanced foreign-made heating and air conditioning equipment, which incorporate hot water boilers. This market is very large and demand is quite stable. The average electricity demand of a fuel cell unit for such a building is 10 kWe plus 10 kWh. Hundreds of companies in Russia build and service luxury dachas. The best of them could be good fuel cell technology providers in Russia.

Phosphoric acid fuel cells (PAFCs) operating on natural gas and air can provide users with highly efficient and reliable automatic electric power, heat, and chemically pure water. The added advantages of fuel cells include quiet operation, low emissions, and compact modular design. All these special features allow the fuel cell power plant to be installed quickly and conveniently in the immediate vicinity of a user.

HIGH-QUALITY, UNINTERRUPTIBLE POWER SUPPLY APPLICATIONS

Commercial companies that require high-quality, uninterruptible power are potential fuel cell customers. Some applications include banks, communications services suppliers, and airports.

Banks

Sberbank is the largest savings bank in Russia, with offices and facilities in virtually every city. The head of Sberbank's energy department is now looking for an advanced, reliable source of heat and power to meet the energy needs of several thousand bank branch offices. Although fuel cells are new to this energy department, the department is considering developing a fuel cell or other new technology demonstration project for one of Sberbank's buildings. If such a demonstration were successful, the energy department estimates a potential demand of up to 500 units per year with capacities of 100-150 kW per year with unit costs of $800-$1200/kW.

The 100 largest Russian banks control more than 500 large buildings. Based on discussions with bank facility managers, these banks will need over 25,000 kW of new power capacity over the next 10 years and they could likely afford to spend up to $25 million on this capacity. Fuel cells might be able to tap a portion of this market.

Mobile Phone Providers

A new study by the Electric Power Research Institute's (EPRI) Consortium for Electric Infrastructure to Support a Digital Society (CEIDS) shows that power outages and other power quality disturbances are costing the U.S. economy more than $119 billion annually[1]. These disturbances are particularly acute in the area of telecommunications service providers. The study emphasizes the need for the energy industry to maximize power reliability and quality.

Russia also has a very active telecommunications market. Mobile phone services are one of the fastest growing areas of the economy. Mobile phone companies include Mobile Telesystems (MTS) and Wimplecom, both of which are among the most profitable in Russia. Wimplecom was the first Russian company to list directly on the New York Stock Exchange; MTS is also listed there. Power supply is critical to these companies' success because short power outages can have major impacts on the computer systems critical to operating mobile phone networks.

Companies in Scandinavia Looking for Clean, Reliable Power

The City of Stockholm is inviting fuel cell manufacturers to participate in a technology procurement for residential fuel cells in the 2-6 kW range. The pilot installations are fuel cells for new residential construction in a new city district in central Stockholm. The fuel cells will be fueled with biogas from a nearby sewage treatment plant. The same type of project could be developed for the Northwest territories of the Russian Federation that are polluting the Scandinavian countries.

A number of governmental organizations work with the Pskov, Novgorod, Kaliningrad, and Arhangelsk regions on energy efficiency programs. Total investments are about $5-10 million per year. A portion of this money potentially could be used to support a demonstration fuel cell project.

MUNICIPAL COMMERCIAL AND RESIDENTIAL BUILDINGS

Commercial and residential buildings may present some opportunities for fuel cell deployment. The commercial building sector represents more than 1.5 million buildings, which consume a total of more than 20 million GJ. Using fuel cell waste heat for cogeneration in buildings would reduce heat distribution losses, which often exceed 30 percent in Russia. Fuel cells would also provide more stable and flexible heat and power. This would improve the security of data systems and the comfort of staff working in the buildings.

Large-scale use of fuel cells in the residential heating market for large apartment buildings (in which most Russians live) is not likely in the near to medium term, but smaller projects covering a limited number of buildings are possible. Moscow City has expressed its desire to do a fuel cell demonstration project along the Garden Ring Road (encircling the center).

---

[1] "The Cost of Power Disturbances to Industrial & Digital Economy Companies," Consortium for Electric Infrastructure to Support a Digital Society (this consortium is an initiative by the Electric Power Research Institute and the Electricity Innovation Institute), 2001.

Affluent condominium associations might also be willing to consider fuel cells, particularly if central heat supply were not acceptable.

Most municipal buildings in Russia are heated through centralized district heating systems. These systems are usually very inefficient. Heat is produced in city-owned boilers using coal, gas or oil, or in cogeneration plants owned by RAO EES, or in some cases in industrial boilers. Russia produced 9,128 million GJ of heat in 2000. City-owned boilers do not generally cogenerate, and the boilers tend to be antiquated. Up to 30 percent of the heat produced is typically lost in the distribution system because of poor insulation and leaky pipes. Controls are minimal: district heating operators regulate heat production based on weather forecasts and not real-time demand in most cases. Buildings close to the point of supply tend to get excess heat, while buildings at the end of the pipe may be cold. Building owners and occupants usually have no control over the heat supply, and they usually resort to open windows when room temperature gets too high. District heating systems also supply hot water, although hot water is usually turned off for several weeks in the summer for system repairs. Because of the inconvenience of the Russian district heating system, many Russians have begun installing building-level boilers. This is the market in which fuel cells would compete. Supporting data on the Russian district heating sector are presented in Appendix 4.A.

LARGE PUBLIC SECTOR ENERGY CONSUMERS: FEDERAL BUILDINGS

Federal agencies are major recipients of public funds for energy efficiency from a variety of government programs and the Russian Federation Ministry of Fuel and Energy now has an energy efficiency program for federal buildings. In Russia, there are 138 ministries, federal agencies, and committees financed by the federal budget. In all, this federal infrastructure includes approximately 22,000 enterprises and organizations with a total annual energy consumption of more than 922,000 GJ. In 1997, fuel costs for these organizations exceeded $3.6 billion.

Major energy consumers in the Russian Federation are the strategic ministries and federal services. Table 4.1 and Figures 4.1 to 4.4 below describe the volume and structure of fuel consumption and related public expenses, as well as the distribution of energy consumption by typical facilities financed from the consolidated national budget.

Table 4.1 Energy Consumption by Organizations and Enterprises Financed from the Consolidated National Budget of the Russian Federation

Agency Name	Energy Use in 1997 (US$ million)	Percent of Total Energy Consumed by Buildings Financed from the National Budget
Ministry of Defense	831.9	19.8
Ministry of Education	461.2	11
Ministry of Internal Affairs	303.3	7.2
Ministry of Health Care	250.0	6
Ministry of Nuclear Power	60.3	1.4
Border Guard Service	57.8	1.3
Ministry of Transportation	29.0	0.7
State Tax Service	30.7	0.7
Federal Security Service	21.7	0.5
Agency for Government Communication and Information	17.8	0.4
Ministry of Culture	6.8	0.16
Ministry of Emergency Situations	5.4	0.1
State Customs Committee	9.2	0.2
Ministry of Economy	0.9	0.02
Ministry of Natural Resources	0.1	0.004
TOTAL	2,103.8	

Figure 4.1 Distribution of Energy Resources Consumed by Budgetary[2] Agencies (1997)

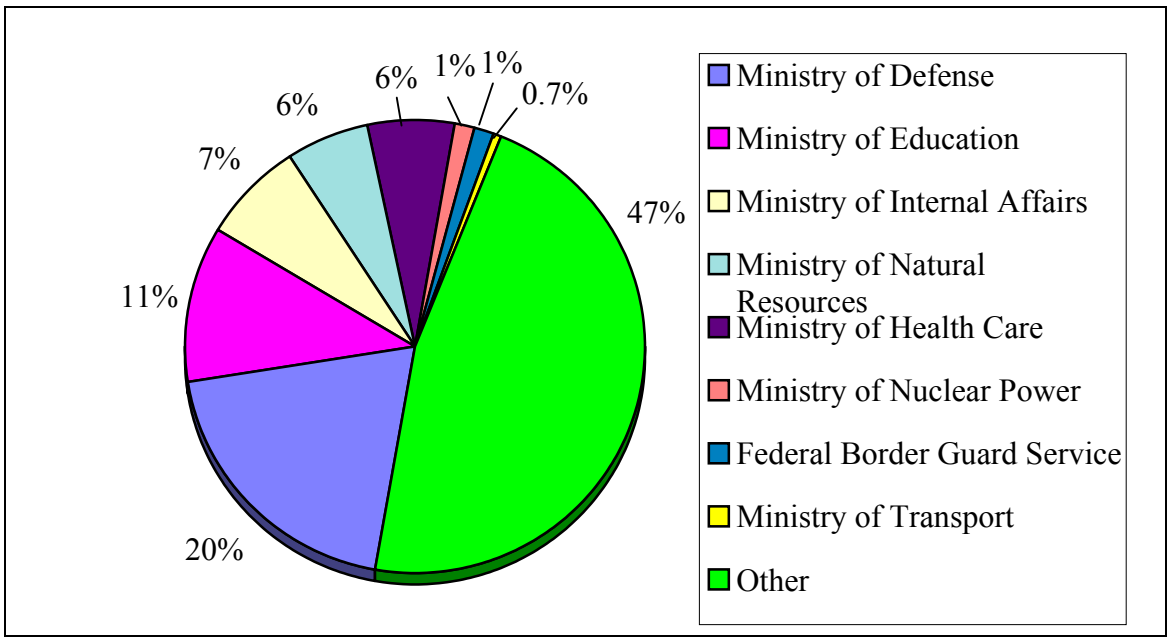

[2] Budgetary here means an organization or agency financed by the national consolidated budget.

Figure 4.2 Costs of Fuel and Energy Consumption by Budgetary Organizations (1997, Million US$)

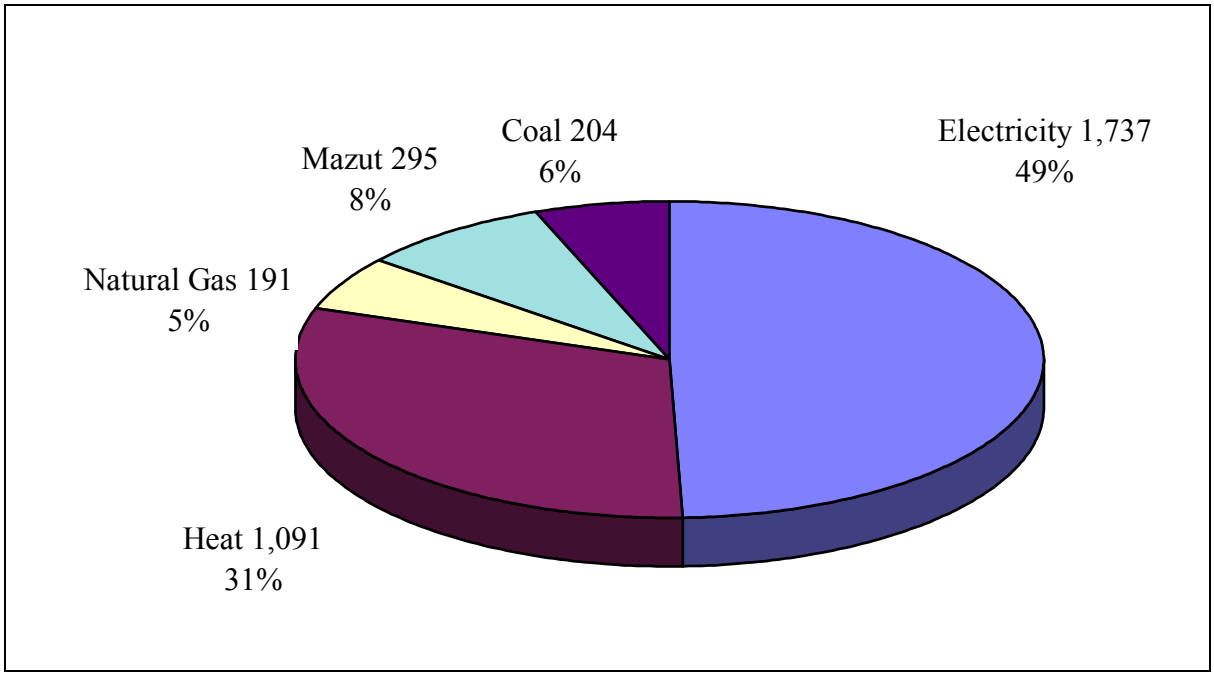

Figure 4.3 Fuel and Energy Consumption by Budgetary Organizations (Thousand GJ)

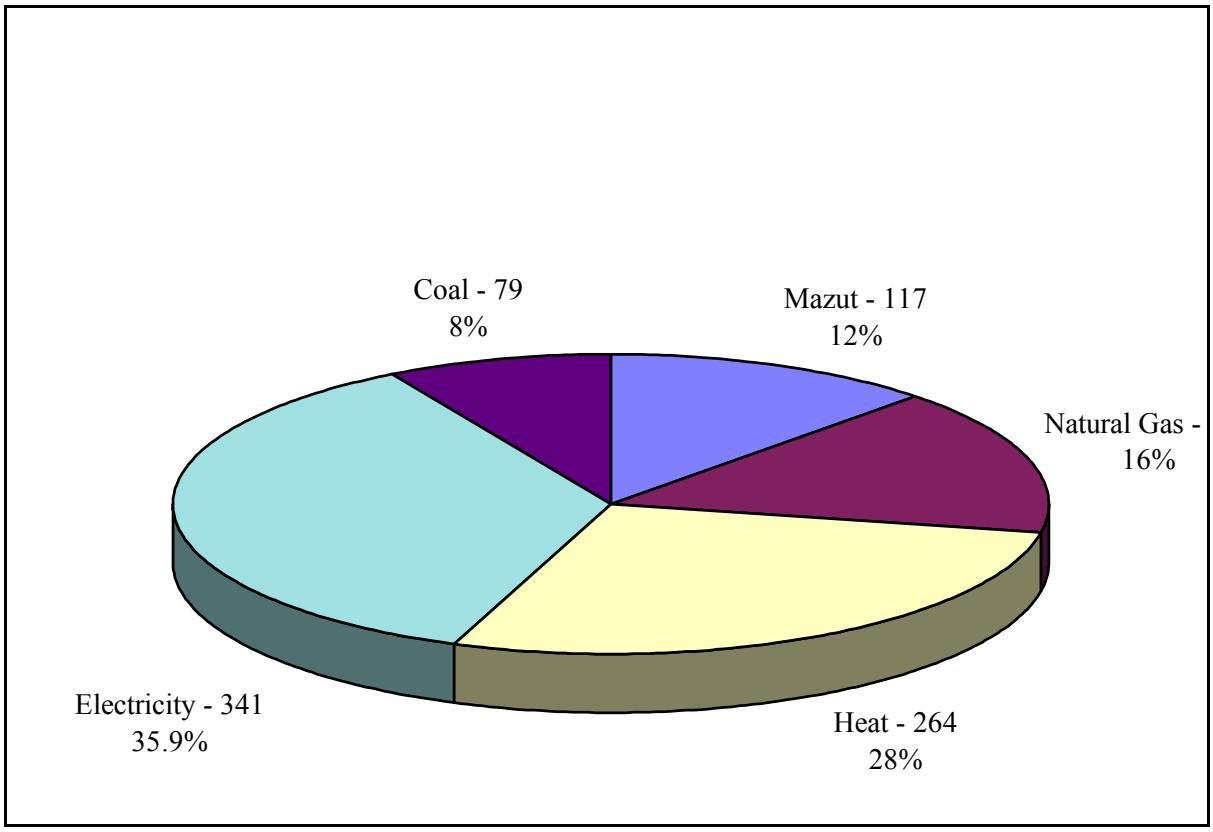

Figure 4.4 Distribution of Fuel and Energy Use by Typical Budgetary Facilities, 1997

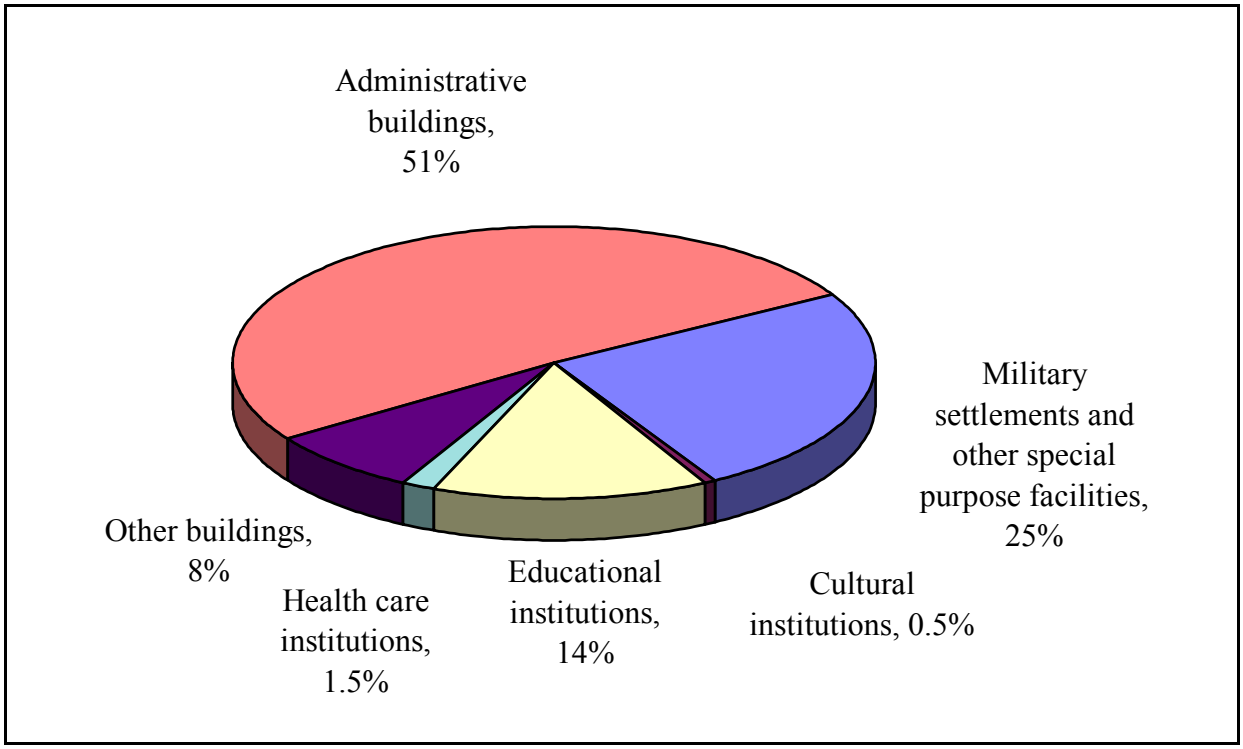

Buildings of the Ministry of Defense and specialized agencies, such as the Federal Agency for Government Communications and Information and the Federal Security Service, could become primary candidates for fuel cell installations. However, at present, it is difficult to project the possible size of this market. In these ministries, decision-makers consider a variety of issues in procurements, including economics and national security.

It is perhaps more meaningful to assess the potential fuel cell market over a 10-year time horizon for administrative buildings, Ministry of Education buildings (for example, Moscow State University), hospitals, and cultural facilities (museums and memorial buildings, for example). These buildings are responsible for 67 percent of budgetary energy consumption with associated energy costs of US$ 1.4 billion per year.

According to Vladimir Zhuze, technical director of the Russian Center for Energy Efficiency, an optimistic estimate of possible fuel cell deployments is that fuel cells could meet approximately 10-15 percent of total budgetary building energy demand. This assumes that approximately 8 percent of electricity and heat generated by conventional energy sources could be replaced. Potential annual savings would amount to almost 70,000 GJ. Proton exchange membrane fuel cells (PEMFCs) with capacities of 100 –500 kW would be the most likely technology for these applications.

TRANSPORTATION SECTOR

AvtoVAZ, Russia's largest auto manufacturer, unveiled a new fuel cell-driven Lada at the Moscow Autosalon Exhibition held August 22-26, 2001. The vehicle has a 25-kW fuel cell operating on hydrogen fuel.

General Motors, the world's largest vehicle manufacturer, has formed a US$ 332 million joint venture with AvtoVAZ and the European Bank for Reconstruction and Development. The joint venture will build 75,000 sports utility vehicles a year under the Chevrolet brand at a new facility adjacent to AvtoVAZ's plant in Togliatti, about 600 miles (1,000 kilometers) southeast of Moscow.

In addition to the AvtoVAZ venture, other fuel cell partnerships are also being pursued. For example, the Power Technologies Corporation (PTC) of California and Rocket Space Corporation Energia (RSC Energia) of Russia launched a joint effort to commercialize fuel cells for the stationary and transportation markets. The two companies will develop mobile power fuel cells for use in buses, trucks, and rail transportation and for vehicles that operate in hostile natural environments such as submersibles and mining equipment. They will also develop units operating on natural gas, propane, and diesel for DG applications and for powering seawater desalination units.

WORKS CONSULTED

Aldretti, Paul. 2001. "Sustainable Solutions: Fuel Cells: What are we waiting for?" Jade Mountain Access Company. At: www.jademountain.com/articles/fuel-cells.html.

"AvtoVAZ Hydrogen Car." 2001. News Release, 31 August 2001. AvtoVAZ Press Center. Samara, Russia At: www.vaz.ru/press/.

Energy: Numbers and Facts. 1998. Central Scientific Research Institute of the Ministry of Atomic Energy. Reference Manual H/16211/22. Moscow. *In Russian.*

Prices and Market. 1997. State Statistical Committee of the Russian Federation. Vol. 3. Moscow. *In Russian.*

"The Cost of Power Disturbances to Industrial & Digital Economy Companies." 2001. Consortium for Electric Infrastructure to Support a Digital Society (CEIDS). At: http://ceids.epri.com/ceids/Docs/outage_study.pdf.

CHAPTER 5: INTERNATIONAL DEMAND FOR RUSSIAN FUEL CELLS FOR POWER APPLICATIONS

INTRODUCTION

This segment of the study looks at the world fuel cells market and tries to identify potential niche markets that Russia could target if it were to produce fuel cells. Russia does not currently produce fuel cells, but it does produce and export competitive power equipment to several Asian and European countries. Russian scientists are conducting research on new fuel cell technologies. One important question on which the future of this research rests is whether there will be a market for Russian fuel cells or fuel cell technologies if they are commercialized. The existence of such a market is important to the ongoing Russian fuel cell research in two ways. First, the information on this potential market demand would be useful in designing and prioritizing research projects that have the potential for commercialization. Second, this market information may help attract funding and Western collaborators for the research.

BACKGROUND

Fuel cells are an emerging technology that can be used for both power and automobile applications. For power applications, fuel cells can be used in cogeneration or for producing high-quality uninterruptible power alone. International Fuel Cells (IFC) has sold phosphoric acid fuel cell (PAFC) power plants to several countries. Fuel cells for mobile applications are close to commercialization but only demonstration projects exist. For example, Ballard, a Canadian company and the largest developer of fuel cells for mobile applications in the world, has signed several contracts to supply fuel cells to car manufacturers in 2001. In addition, several other companies have sold a limited number of fuel cells or expect to commercialize their fuel cells both for mobile and stationary applications in a few years.

Russia has a tremendous need to invest in innovative technologies to promote economic growth. Fuel cells may provide such an opportunity. Russia's investment in fuel cells will provide greater opportunities for Russian fuel cell experts. Russian weapons scientists have expertise in fuel cells but currently lack the funding to pursue their research. Finding long-term, peaceful employment for these scientists will help promote non-proliferation as well as research into more cost-effective fuel cell technologies. Fuel cells could also contribute to climate change mitigation and environmental protection because their emissions are much lower than most other energy technologies available today.

The potential market for fuel cells is growing as fuel cell costs come down. A more detailed assessment of the potential market opportunities could help both Russian and foreign fuel cell developers bring their products to market and create a fuel cell industry in Russia. Russia can potentially play an important role in international fuel cell research if it can produce lower-cost materials and balance-of-plant equipment. Bringing the cost of fuel cells down is key to expanding global demand for this environmentally beneficial

technology. Understanding Russia's ability to sell fuel cells to other countries and studying foreign markets will also help Russia to better target R&D programs, thereby helping to create more reliable and cheaper fuel cell technologies.

While Russia has vast experience in manufacturing and exporting power-generating equipment to the former Soviet Union and Eastern European and developed countries, it has less experience in exporting automobiles, especially to developed countries. It is expected that mobile applications will outpace stationary installations in the near future. Also, mass production of fuel cells for mobile applications will help to substantially reduce the cost of fuel cells. Developing fuel cell cars will help Russia reduce air pollution in its cities. Russia does have substantial automobile markets in some regions, for example in Eastern Europe. Foreign car manufacturers have been working in Russia for many years and some of them, such as General Motors, are developing fuel cell technologies. It is important for Russia to tap into the markets for mobile fuel cell applications; however, American and Western European car manufacturers have stronger market positions in the region and more experience in this field. The Russian companies could enter the market for mobile application fuel cells by providing components to those Western-built fuel cells.

This analysis concentrates on the potential demand for Russian fuel cells for power applications. The following four-step approach describes how Russia might be able to market and sell fuel cells abroad:

1. Look at the potential world markets for fuel cells to identify which regions will have the greatest demand for fuel cells and in what applications fuel cells will most likely be used. Analyzing world markets can also help understand customer motivations to buy fuel cells for different applications. It will be useful for Russia to target customers that have strong incentives to buy fuel cells because they have an urgent need to reduce pollution or need high-quality, reliable power; these are applications that may favor fuel cells. It is also useful to look at existing fuel cell installations and identify the customers who have bought them. Since fuel cells are only now entering commercial markets, they will be used initially in niche markets. This analysis can help identify such niches.

2. Look at Russian equipment exports to understand whether customers have confidence in and are willing to buy Russian power equipment and to see where Russia sells equipment internationally. While fuel cells are a new technology, Russia's chances of marketing this technology will be greater if it already produces and exports sophisticated equipment comparable to equipment that large, well known energy companies produce.

3. Compare information from the first two steps and perform a more thorough analysis of the countries that traditionally have bought Russian power equipment and will have a demand for fuel cells. By targeting these markets, Russia would have a greater chance of successfully selling fuel cells. At the same time, though, Russia may face intense competition from companies already exporting fuel cell

technologies to these regions. For example, China and India are attractive markets for fuel cell suppliers because of their growing energy demand. Since Russia already sells power equipment to these countries, it is important for Russia to target these markets for fuel cell technologies while facing competition from other foreign companies. Creating partnerships with such companies may help Russia commercialize its technologies and enter these markets. It is also important to look at regions not expected to be the largest fuel cell markets but where Russia already exports equipment, for example in Latin America. In addition, it is important to consider countries where Russia does not sell much equipment today but which regularly buy environmentally friendly equipment. Western European countries such as Finland, where Russia sells gas turbines, or Sweden are good examples. In each country, it will be important to identify niche markets and end-users willing to invest their money in Russian fuel cells. Initially, it is unlikely that fuel cells will have broad consumer appeal across an entire nation because of their high cost. The exceptions may be hospitals or banks, where cost will be less important than environmental or safety issues. Russia will not likely see high demand for its fuel cells initially, and therefore it will be necessary to target customers carefully.

4. Identify companies that already have businesses in Russia and promote fuel cell technologies. For example, Ballard, the world's largest fuel cell technology supplier, has an office in Russia through a partner company, Alstom. Siemens/Westinghouse is another example of a company actively promoting fuel cells and maintaining a presence in Moscow. Cooperation between Russian fuel cell designers and these companies may be mutually beneficial. For Russia, such cooperation could potentially spur R&D development, introduce Russian technologies to more customers, and open additional markets worldwide. In return, foreign companies will have access to low-cost technologies and high-quality science.

MARKET FORECAST FOR FUEL CELLS

As suggested above, it is useful to look at both existing and future fuel cell world markets. By analyzing existing fuel cell markets, Russia can better understand end-users' motivation for acquiring this new technology and better develop its market strategies. Since fuel cells are expensive, they will be used initially in niche markets such as those needing high-quality power (for example, banks, data processing centers, etc.) or onsite generation. By targeting these niche applications, Russia will have a better chance of selling its fuel cells. Analyzing future markets will help Russia identify countries that will be the largest consumers of fuel cell, and targeting these markets will further increase Russia's chances to sell even more. The following section provides information for stationary applications.

Because of the worldwide interest in fuel cells, many consulting companies and government agencies have conducted market research to assess the demand for fuel cells for different applications. The following section uses the results of two publicly available

studies. The U.S. Coast Guard researched the demand for fuel cells for marine applications, and its report includes a section that EscoValue Inc., a consulting company, prepared on the market forecast for fuel cells for wider applications (U.S. Coast Guard 1999). Arthur D. Little conducted a study on developing new renewable energy technologies in Massachusetts and provided a good overview of fuel cell technologies and key factors that will influence consumer choices for fuel cells (Arthur D. Little 1998). It is difficult to assess the accuracy of the U.S. Coast Guard's information about growth rates for fuel cell installations and their distribution between regions since the U.S. Coastal Guard does not provide detailed information about its assumptions. However, its research can provide insights into understanding general trends.

Arthur D. Little pays particular attention to the first fuel cells to be commercialized—those produced by IFC. IFC manufactures approximately 10 MW of fuel cells per year as 200-kW power plants called PC25 (Arthur D. Little 1998). By 2000, IFC had delivered 220 units to customers in 15 countries in North America, Western Europe, and Asia (Miller 2001).

According to the U.S. Coast Guard report, the total aggregate installed capacity for fuel cells in 1998-1999 was 800 MW, and the market value was around $2 billion. PAFC accounted for 60 percent, molten carbonate fuel cells (MCFC) for 30 percent, and proton exchange membrane fuel cells (PEMFC) for 15 percent of all installations. North America accounted for almost half of all installations, Asia-Pacific for 40 percent, and Western Europe for 15 percent. Stationary power applications with installed capacities of 10 kW-30 MW accounted for almost all applications. Mobile applications contributed less than 1 percent.

Fuel cells are an important new market for power generation that is small but growing rapidly. For example, between 1995 and 1999 the market grew from 50 to 250 MW annual installed capacity (U.S. Coast Guard 1999). In addition to IFC, several other companies are ready to introduce or have introduced commercial versions of fuel cells. For example, Fuel Cell Energy, Inc. of the United States recently introduced a 250-kW Direct Fuel Cell power plant at a German hospital (Fuel Cell Energy 2001). Ballard's orders for mobile fuel cells in 2001 reached more than $20 million (Fuel Cell Energy 2001). In addition, Ballard is planning to introduce a 250-kW power plant in 2002 (ACEEE 2001). Overall, there are approximately 100 stationary power fuel cell installations, mostly for demonstration purposes, in the United States alone (DOE 2000). Most fuel cells are installed in hospitals, banks, and post offices. Table 5.1 lists the main reasons fuel cells are appealing to customers in spite of their high cost.

The following examples of fuel cell installations explore their advantages in more detail:

> In 1999, the New York Power Authority installed PAFC fuel cells supplied by IFC at a police station in New York City. The motivation was that unreliable distribution lines did not allow the police department to run computerized fingerprint identification systems and air-condition the whole station. New power lines would have cost $1.2 million. Instead, for $1 million police received their own power plant–

a clean, ultra-efficient fuel cell. On May 1, they cut themselves off from New York's power grid. "It's great to be self-sufficient," said police Capt. James O'Neill. These new systems provide more reliable power and drastically cut air pollution, supporters say, because they produce both power and hot water. The hot water, which can also be used for heating and air conditioning, makes the systems two to three times more efficient than more conventional power sources (Borenstein 1999). The federal government provided a rebate of $1,000/kW of installed capacity (Advance 1999).

In 1999, Chugach Electric Association, Inc. installed a PM25 PAFC power plant at the U.S. Postal Service's Anchorage, Alaska Mail Processing and Distribution Facility. Five fuel cells connected in parallel to produce 1 MW of electricity are the primary source of power for the Anchorage facility, located adjacent to the Anchorage International Airport. It is the world's largest assured-power fuel cell installation.

"Postal Service facilities are becoming increasingly sensitive to power quality and reliability and to the needs of the environment," said Dianne Horbochuk, U.S. Postal Service senior plant manager in Anchorage. "Facilities such as this one in Anchorage operate 24 hours a day, 7 days a week. Power outages cause an interruption in the automatic mail processing for both incoming and outgoing mail, adding cost to our service. The fuel cell system offers an environmentally clean, proven solution for onsite generation to meet our growing power needs." Excess power from the fuel cells will be fed into the Chugach electric grid (LYCOS Network E-wire 1999).

In 2001, H Power Corp, one of the leading fuel cell development companies, supplied a residential PEMFC cogeneration unit to Fortum Oy, a major international energy company based in Finland, which has installed it in a test house in Aetsa, Finland. The unit is fueled by hydrogen and will supply all the electricity and heat used by a typical household. In addition, the unit will be "net metered" to sell surplus electricity to the local electric utility (Business Yahoo 2001).

In 2001, FuelCell Energy's partner in Europe, the MTU Friedrichshafen GmbH unit of DaimlerChrysler began operating a 250-kW Direct Fuel Cell (DFC) power plant at the Rhon-Klinikum Hospital in Bad Neustadt, Germany. The power plant is connected to the hospital's internal power supply system and will also provide heat. It contains DFCs manufactured by FuelCell Energy and configured in a power plant design by MTU. The power plant placed into service today will also generate approximately 170 kW equivalent of by-product heat, which can be used to produce high-pressure steam. In hospital and medical settings, this high-pressure steam can be used for sterilization and air conditioning (Fuel Cell Energy 2001).

These are only a few examples of stationary fuel cell installations but they reveal several important points. It is crucial to customers that fuel cells can provide excess electricity that can be sold to the grid because that improves fuel cell economy. This will be a key factor in developing countries such as India, where more and more industrial companies are interested in producing onsite electricity or heat.

“Net metering” for residential customers is also important. For example, an increase in demand for renewable technologies in the United States happened in great part because the government allowed “net metering,” so that residential customers could sell excess power back to their power company. Customers value fuel cells because they can be used as cogeneration units and produce both electricity and heat. Tax incentives, such as the proposed U.S. government tax rebate of $1,000 per kW of fuel cell installed capacity, will greatly increase the attractiveness of fuel cells and allow more consumers to install them. Such incentives will be especially important for developing countries where consumers lack capital to install new technologies. It will further increase demand for Russian fuel cells.

Finally, the availability of natural gas is currently an issue for fuel cell development since it is mostly used as a source of hydrogen. As technologies to obtain hydrogen from renewable sources of energy gradually develop, more fuel cells will be installed in countries that lack natural gas.

As fuel cell technology develops, the market for this technology will evolve and Russia will need to play a role. Table 5.1 shows fuel cell markets for stationary applications in the next two decades. In the next decade, mobile markets are expected to outpace stationary markets in installed capacity but their monetary value will be the same. The U.S. Coast Guard suggests that the market share of regions will be equal throughout the next two decades.

Table 5.1 shows that Western Europe and North America will likely lead the demand for stationary fuel cell applications. Asia would be third, but if mobile applications were included Asia would outpace Western Europe. Table 5.2 also shows that fuel cell installations with a capacity between 1-30 MW will likely represent the largest market share. It will be important for Russia to develop small- and medium-scale equipment. Russian fuel cell development has to date focused on small-scale equipment or on components. Currently, Russia produces large-scale equipment mostly for traditional technologies. Russian equipment sales data show that Russia has large markets in Asia and smaller but more stable markets in Europe. After the collapse of the Soviet Union, Russian power equipment producers were able stay in these markets due to traditional trade relations and low production costs.

Traditional trade partners and confidence in Russian products in regional power equipment markets are strong assets in marketing Russian fuel cells. Russian power equipment, in several instances, has also been able to resist competition from Western producers of power equipment, mainly due to low manufacturing costs. Russia could target these traditional markets to supply fuel cells in the future, by adding them into the small power equipment product line. A carefully developed marketing strategy would allow penetration of new products into the existing markets.

Table 5.1 Markets for Stationary Fuel Cell Applications

Application	Year				Territory (Percent)				Type (Percent)	
	2005 (MW)	2010 (MW)	2015 (MW)	2020 (MW)	North America	Western Europe	Asia/ Pacific	Other	Low temperature (PAFC PEMFC)	High temperature (SOFC MCFC)
> 30 MW	50	175	525	1,300	35	24	30	11	10	90
1-30MW	1,100	3,450	6,700	10,200	48	31	15	7	16	84
10kW-1MW	275	525	950	1,550	37	25	31	8	46	54
< 10 kW	50	175	450	800	33	26	38	3	69	31
Total (MW)	1,450	4,350	8,650	13,800	45	29	19	7	22	78

Source: U.S. Coast Guard 1999.

On the other hand, in those markets where Russian producers cannot compete with the established reputation of Western firms, even if the Russian products were comparable to the Western products in quality and price,[1] it might take years for the perspective Russian fuels cell producers to build reputation and customer confidence, and hence demand for their products. For a new technology, these are critical factors.

The most important, and probably the most efficient, way to overcome the obstacles to new market penetration and commercialization of Russian fuel cells would be to create partnerships with Western vendors who already have a sound foundation and reputation in the market. Such partnerships would also be beneficial to Western counterparts. One of the essential assets Russia can contribute to such a partnership is a top-notch labor force of nuclear scientists. Initially, the Russian partners could organize production of different fuel cell components manufactured by Western companies. Given Russia's natural resources and scientific potential, it is likely that Russia would have comparative advantages for some production stages.

The DOE's Nuclear Cities Initiative (NCI), for example, is working to downsize the Russian nuclear research complex, and one of the ways being considered is retirement. Thousands of nuclear scientists could be retired if provided a sufficient pension, which would total approximately $500 per person annually. The average wage of a nuclear scientist in Russia is at most $600 per year. Compared to professionals' pay in the West, if put to use in the fuel cell industry these scientists would not only remain productive instead of retiring but would save fuel cell producers enormous s labor costs (Bukharin et al. 2000).

The needs of the fuel cell industry mesh well with the skills and capabilities found in the nuclear cities. Nuclear scientists pursue the same curricula as energy engineers until relatively late in their education. Physics, mathematics, thermodynamics, materials research, and advanced computation are skills critical to both fields. As nuclear scientists look for new work and sources of income to supplement their dwindling nuclear research budgets, multilateral foundations launch programs to help create non-weapons jobs for excess nuclear scientists. For instance, the European Bank of Reconstruction and Development's (EBRD's) Russia Small Business Loan plan and the Global Environmental Facility's (GEF's) operational programs on reducing long-term costs of low greenhouse gas (GHG) emitting energy technologies could provide additional funding for potential partnerships and joint ventures.

To help entrepreneurs in the nuclear cities make their own business contacts directly, the NCI has underwritten the cost of EBRD small business loans and created international development centers (IDCs) in some nuclear cities. These IDCs have provided business training and resources to local entrepreneurs (Bukharin et al. 2000).

---

[1] To quantitatively and qualitatively compare the performance and pricing of Russian power equipment with that of Western equipment would require adequate statistics from consumers who have used both. Such information could be obtained through consumer surveys to justify the lower prices for Russian equipment, but such analysis is beyond the scope of this study.

Russian private and municipal sectors have identified vast opportunities for the practical application of fuel cells. For example, fuel cells could play a role in stand-by power applications and in remote locations in Eastern Russia. Because of Russia's size, developing experience with diverse applications of fuel cells is crucial and will also provide environmental and economic benefits. Russia's involvement with fuel cells R&D and production will help to bring down the costs of fuel cells – currently the major obstacle for their wide commercialization.

However, if the fuel supply for such units were to come from local resources, an appropriate infrastructure would have to be put in place. Technical issues, together with institutional practices and regulatory policies, can create obstacles to entering the market for both Russian and foreign producers and must be resolved. For example, in July 1998 the U.S. Department of Commerce's U.S. & Foreign Commercial Service identified electric power generation equipment as one of the best prospects for U.S. exports. However, since the majority of goods shipped to Russia are subject to various types of customs fees, levies, documentation, and other customs requirements, some foreign investors might find it more beneficial to produce fuel cells in Russia. Given the abundance of rare metals, low costs of manufacturing, high-quality labor, and intellectual property, Russia appears a favorable place for fuel cells production both for domestic consumers and for export as well, even for foreign entrepreneurs.

COMMERCIALIZING RUSSIAN FUEL CELLS AND RUSSIAN FUEL CELL EXPERTISE

Commercializing Russian fuel cells has been difficult for a number of reasons. First is the general infancy of the fuel cell industry. Relatively few fuel cells have been sold to private customers to date globally, and many of these transactions involved subsidies in some form.

Second is the lack of funding for fuel cell research in Russia over the past decade. Starting in the 1960s, the Russian government funded fuel cell research as part of its space program and later as part of its nuclear missile programs. It has also funded civilian research on fuel cells for stationary energy use, but much of this research was just beginning when the Soviet Union collapsed in 1991. Since the collapse of the Soviet Union, the government has downsized military expenditures, and the country has faced a major economic recession. As a result, government funding for fuel cell research declined significantly after the late 1980s.

Third is the challenge that scientists the world over face in translating commercial demands into promising research directions, and ultimately, commercially viable technologies. This challenge is particularly acute in post-socialist societies where market economies and true consumer demand did not exist for most of the 20th Century.

Nonetheless, Russia does have numerous advantages in the fuel cell area. Given the shortage of qualified fuel cell researchers many Western firms face, Russia's lower costs for highly qualified intellectual labor, combined with relatively cheaper manufacturing,

construction, and energy costs, may be a particularly important. Although most Western firms that have set up manufacturing facilities in Russia have only done so when there has been a clear domestic or regional market for their goods. Finally, Russia does have unique intellectual property in fuel cell technologies. Much of this is in membrane or balance-of-plant. Below is a brief summary of some of the key Russian research centers' expertise in fuel cells.

Civilian Fuel Cell R&D

Boreskov Institute of Catalysis (Novosibirsk; http://www.catalysis.nsk.su/~ils/; www.intas.be/catalog/951-0255.htm). This institute, as the name indicates, focuses on catalysts. Most of its fuel cell research relates to catalysts for high-temperature fuel cells. It has also studied nanostructured electrodes in electrocatalytic processes and has researched catalytic conversion of solar energy. The institute's researchers have collaborated extensively with research groups in Western Europe.

Institute of Electrochemistry (Moscow). This institute conducts research on molten carbonate fuel cells (MCFCs). It has led a project funded by the International Science and Technology Center in Moscow to optimize mass exchange in molten carbonate fuel cells and to investigate the transport phenomena of reactants and products in electrode-membrane assemblies.

Institute of High Temperature Electrochemistry (Ekaterinburg). This institute is unique in Russia in that it has created a complete, operational fuel cell. Specifically, the Institute produced a 1-kW solid oxide fuel cell (SOFC) in 1989. The test model has an electrical efficiency of 40 percent and can run on either hydrogen or natural gas. In the past 10 years, the Institute has conducted research on lower cost and more reliable electrodes including two designs made with platinum and manganite, respectively. Scientists at this institute have also researched film electrodes. While most of this research is for SOFCs, the institute also conducts some research on molten carbonate fuel cells (MCFCs). Key fuel cell researchers include E. Kurumchin, deputy director of the institute and Prof. Sergei Somov, a senior fuel cell researcher.

Institute of Problems of Chemical Physics. (Moscow Region; www.icp.ac.ru/). This institute is part of the Russian Academy of Sciences. It has laboratories focusing on catalysis, electrochemical dynamics, polymers, and composite materials.

Krzhizhanovsky Energy Institute (Moscow). This institute receives most of its funding from Russian's main electricity company, RAO EES. The institute itself conducts little fuel cell research, but RAO EES had tasked the institute with organizing a fuel cell research group within RAO EES's Research Council. Vladimir Popov heads this research group, which consists of about 15 of the leading Russian fuel cell researchers. RAO EES's goal in establishing this research group was to identify the most promising fuel cell R&D in Russia for potential commercialization. RAO EES has also formed a loose consortium with the Ministry of Atomic Energy and Gazprom to fund and pursue fuel cell research. RAO EES's stated intention is only to concentrate on areas in which

Russian researchers have a competitive advantage, such as balance of plant research; it is also interested primarily in SOFC and PEM fuel cells. According to Dr. Popov, Russian research could then be paired commercially with Western fuel cell technology to significantly bring down the cost of complete fuel cell units. However, little funding has flowed from this research initiative and consortium.

Moscow Power Engineering Institute. This institute has worked on SOFCs. It has developed electrocatalysts, electrodes, and electrolytes. Much of this research is classified as it was conducted for the military. Dr. N.V. Korovin is the chief fuel cell researcher in this organization.

Moscow State University (MSU). (www.chem.msu.su/eng/chair/welcome.html) The Chemistry Department at MSU conducts research on bioelectrical catalysis, hydrogen biofuel electrodes, as well as other types of electrodes and enzymes.

Moscow State University of Mining (http://science.msmu.ru/a/01/) This university conducts research on coal technologies and carbon polymers, which may have some applications for PEMFCs.

Nesmeyanov Institute of Elemental Organic Compounds. (Moscow; www.ineos.ac.ru/) This institute is a member of the Russian Academy of Sciences and a leading Russian research organization in organic compounds, polymer science, and materials science. It has conducted research on catalysts, hydrogen bonding, and proton transfer in metal-organic chemistry. The institute has conducted joint research with collaborators in France, Germany, and Italy.

Fuel Cell R&D in the Nuclear Weapons Complex

Kurchatov Institute (Moscow; www.kiae.ru/eng/wel/dmk/bdma.htm). The Kurchatov Institute conducts research on PEM fuel cells. It has made significant progress in developing new, cost-effective membranes. It has also worked on advanced catalysts and electrodes for fuel cells. The institute has conducted research in collaboration with the Russian car manufacturer AvtoVAZ as well as with numerous foreign partners. Vladimir Fateev is the lead fuel cell researcher at Kurchatov.

VNIIEF (Sarov, Nizhny Novgorod Region; www.vniief.ru/). VNIIEF conducts research on MCFCs. It has worked on improving the corrosion resistance of MCFC cathodes, developing new catalysts and advancing fuel cell diagnostics. The institute has worked on several projects funded by the International Science and Technology Center (ISTC) and the DOE.

VNIITF (Snezhinsk, Cheliabinsk Region; www.ch70.chel.su/vniitf/). VNIITF conducts research on solid oxide fuel cells and has collaborated closely with the nearby Institute of High-Temperature Electrochemistry in the past. VNIITF has begun work on a 2-5 kW SOFC prototype, though insufficient funding has hampered work. Gazprom has expressed an interest in buying these fuel cells, but only once they are ready for

commercialization. The institute has also conducted research on nanoceramic mandrels in SOFC. The institute has collaborated with several U.S. national laboratories and institutes in Germany on fuel cells.

Fuel Cell R&D for Aerospace Applications

Energia (Moscow Region; www.energialtd.com/rsc.htm). Energia is a private R&D company most famous for its work on Mir and the International Space Station. It designed and built the Russian modules for this station. Energia also designed the first Russian satellite and the Mir Space Station. Energia began PAFC design work in 1966 in preparation for a proposed Russian lunar landing. In the early 1990s, Energia began research on fuel cells for submarine applications. Energia has not conducted significant research on terrestrially based fuel cell systems, although it has signed an agreement with U.S.-based Power Technologies Corporation to commercialize fuel cells for stationary and mobile applications. Dr. Sergey A. Khudyakov leads the fuel cell research at this company.

THE RUSSIAN POWER GENERATION EQUIPMENT MARKET AND EQUIPMENT EXPORTS ABROAD

Introduction

To understand Russia's future ability to market and sell fuel cells to foreign countries, it is important to look at:

1. The type of power generation equipment Russia produces,

2. Countries where Russia currently exports its equipment, and

3. The prospects for Russian equipment sales in the future.

The only information currently available is for large Russian companies that produce and sell mostly large-capacity equipment. Most of these companies were established before the collapse of the Soviet Union, and their production methods were oriented to supplying equipment for large power plants the Soviet Union built on its territory and in foreign countries. On the positive side, many of these companies were unable to preserve their production facilities and export markets but actually increased their production levels and diversified exports. Several companies such as Joint Stock Company (JSC), Kaluga Turbines (KTZ), or JSC Belgorod Power Engineering Works (Belenergomash) are becoming more interested in producing small-scale equipment. In the case of exports, several Russian export companies are successfully marketing Russian equipment abroad. If fuel cell development and commercialization is successful, these export companies may become interested in exploring new markets. It is also important to note that countries continue to buy Russian equipment, which indicates high consumer confidence. This is true not only for Asian countries such as Russia's traditional partners India or China, but also for Western European countries. This also indicates that if Russia can

produce fuel cells less expensively than foreign fuel cell manufacturers, consumers in foreign countries will likely buy them.

Since fuel cells are a new technology that will likely be used for small-scale power generating applications, it is also important to look at Russian companies that have experience in producing and marketing small- or medium-capacity equipment such as gas turbines, reciprocating engines, or equipment for alternative sources of energy such as solar, wind, or biomass. Several such companies have recently been established in Russia but information on them tends to be dispersed.

Overall, exports of power generating equipment from Russia represent only a small fraction of total Russian exports. Russia mostly exports natural resources such as oil and gas or raw materials such as steel or timber. It will take Russia time and effort to develop and market fuel cells abroad, but ultimately Russia can improve its economy by becoming a major developer of new technologies such as fuel cells.

Another approach to understanding the market potential for Russian fuel cell technologies is to look at the potential for partnering with Western firms. Western firms already in Russia will more likely be receptive to the idea of such partnerships. Thus it is also important to identify which major international or foreign energy companies have offices in Russia and whether they develop fuel cell technologies. Such companies usually work globally and have long-term experience with selling their equipment. These companies may be willing to invest in joint ventures with Russian companies and develop fuel cell technologies in Russia if the right opportunities came forward. Collaborating with foreign companies may help Russian fuel cell developers find their niche in other countries since two or three large companies currently dominate the market for fuel cells. Such collaboration can help decrease expenses for foreign companies because Russian materials and labor will be cheaper. Some Russian power equipment producers have already started joint projects with foreign companies. For example, JSC Leningradsky Metallichesky Zavod[2] (LMZ), the main Russian producer of steam and hydraulic turbines, has established two joint ventures with the German company Siemens Power Corporation Group (Siemens KWU) to produce and sell gas turbines using German technology and to conduct turbine operation and maintenance (O&M) work. Siemens does develop fuel cell technologies, in particular SOFCs. In addition to LMZ, Siemens KWU is a shareholder in other Russian power equipment producers. In 1999, Siemens KWU merged with the American company, Westinghouse, and substantially increased its access to Asian markets (Siemens KWU 1999).

Equipment Manufacturers

Like most sectors of the Russian economy, the power engineering equipment industry also suffered a substantial decline in the past decade. One of the main reasons for this decline was the decrease of electricity consumption, the resulting decrease in installation of new generating capacities, and obsolescence of equipment at power engineering facilities because investments were lacking. For example, in 1996 the share of outdated

[2] Leningrad Metal Works. Foreign publications use the Russian name without translating it to English.

equipment reached 81 percent. At the same time, in 1997, production of power generating equipment has gone down to 0.65 million kW from the 3.98 million kW in 1993 (Kotov 2001). The decline in the production of generating equipment was accompanied by a decrease in Russian exports and an increase in the activities of foreign companies in Russia and other countries of the former Soviet Union. In 1998, Russia produced $852 million worth of power equipment while worldwide production was $39.5 billion. In the same year, the global production share of General Electric's equipment in monetary terms was 35 percent, Siemens/Westinghouse's was 24.1 percent, and ABB's was 21 percent (Investment Herald 1999). These three companies actively competed with Russia in Asian markets that traditionally bought Russian equipment. One of the main reasons for foreign companies to move into Asian and other new markets was the decreasing demand for new generating capacities in Western markets due to energy-efficient technologies. This caused profits to drop in traditional markets and forced these companies to go elsewhere (MAP 1998). In the former Soviet Union, Siemens/Westinghouse, General Electric, and ABB already occupy 35-40 percent of the market (Kotov 2001). In 1991, the share of these companies was 8 percent (Investment Herald 1999). It will be useful to look at what happened to the foreign share after the 1998 currency devaluation because, in many sectors, Russian equipment became more competitive. Unfortunately, such recent statistics are not available.

More than 50 companies produce power-generating equipment in Russia but only approximately 10 of them are stable, large companies that dominate the Russian market and are responsible for almost all equipment exports. In 1994, to prevent further decline in the industry, to increase investments, and to consolidate the Russian market, approximately 30 of these companies established a financial and industrial group, JSC Energy Equipment Corporation (Energomash) that now fully controls the Russian market. Energomash coordinates the activities of different companies in the creation of a unified technological chain. This would help companies compete with foreign companies such as ABB, General Electric, or Siemens/Westinghouse. To reach this goal, Energomash is planning to make each company responsible for a particular kind of equipment. In addition, Energomash helps companies obtain financing for upgrading and improving their production facilities. For example, in 1998 Energomash announced a new investment program that should bring in $2 billion of investments to its facilities by 2001 (Advance 1999). Energomash is also responsible for export activities.

Merging the main power equipment producers into one corporation played an important role in stabilizing the power engineering industry in Russia. However, it was not the only factor since producers that do not belong to Energomash also improved their financial situation and increased production. For example, in 1997, JSC Krasny Kotelshchik increased its production by 30 percent in monetary terms. For Energomash companies, this growth was 53.4 percent in 1998 (Advance 1999).

Table 5.2 summarizes information about equipment these producers develop and shows the type of equipment produced, equipment exports to different countries, and their main shareholders. Only companies that produce boilers and turbines are shown in the table. Potentially, these companies might become interested in producing or marketing fuel

cells. In addition, some companies produce auxiliary equipment or spare parts that are used for producing power equipment. They are not shown in the table since they do not produce power equipment but potentially can also produce components for fuel cells.

As is clear from the table, seven power equipment producers in Russia are responsible for almost 90 percent of total sales. The remaining 10 percent are probably equally distributed among less known, older manufacturers and newer companies. Almost all of these seven companies produce only large-capacity equipment. The exceptions are Belenergomash, which produces small-capacity boilers, and UETM, which produces equipment for small hydropower plants. Both companies export equipment to many countries, and UETM has two representatives in foreign countries. However, there are no data available on the share of small-scale equipment in the total sales of these companies and to which countries they sell this equipment. It seems that the main trend in exports is to supply equipment for large thermo or nuclear power plants (see the next section for more detail). For Russia to compete effectively in fuel cell markets, it will need to change this trend and put money and R&D effort into developing new small-scale equipment. Table 5.2 also shows that Russia has quite a broad market for its equipment and exports to many countries. Unfortunately, it is difficult to find what share each region has in total sales. Traditionally, Russia sold equipment to Asia, Eastern Europe, and former Soviet Union republics. Therefore, it is possible that these markets still dominate Russian sales.

The table also shows that several Russian equipment manufacturers have foreign shareholders. Siemens KWU is the most important among them in the power equipment sector. Participation of foreign companies can help build consumer confidence in the quality of Russian equipment. In addition, foreign companies can help Russian manufacturers market their equipment more successfully. This will be especially useful for fuel cells since they are a new product.

Power engineering companies from St. Petersburg represent the largest share of the Russian power equipment market. For example, LMZ is responsible for 60 percent of all turbine sales within Russia and 3 percent of sales abroad (Kotov 2001). In 2001, LMZ is planning to double its production output (Virtual Peterburg 2001).

Exports of Russian Equipment

Since Russian and former Soviet Union customers often do not have enough financing to install new equipment, Russian producers of power engineering equipment are trying to increase their exports and restore their position in the world market. For LMZ and JSC, Krasny Kotelschik exports present almost 50 percent of total sales. Energomash in general sells 20 percent of its equipment abroad. Some companies were able to increase their export shares. For example, in 1997 JSC Electrosila increased its sales by 80 percent mostly because of an increase in exports (Advance 1999).

Table 5.2 Main Producers of Power Generating Equipment

Company	City	Production		Market share (Percent of total sales, 1997-1998)	Export (Percent of production, 1997-1998)	Countries	Main shareholders	Member of Energomash
		Equipment	Capacity					
JSC Leningrad Metal Works (LMZ)	St. Peterburg	Steam turbines, Hydraulic turbines, Gas turbines	64 -250 MW	17	47	Finland, China, Iran, Romania	Energomash (29%) Siemens - KWU (10%) Mardima Co. LTD (16%)	Yes
JSC Belgorod Power Engineering Works (Belenergomash)	Belgorod	Steam heating boilers (natural gas and mazut)	20-100 Gcal/hour	17	11.0	India, Iran	Unknown	Yes
		Industrial waste-heat boilers	11-57 tons/hour					
		Small-capacity heating boilers	100 kW					
		Small-capacity steam boilers	1-25 tons/hour					
		Water heating boilers	0.3-5 MW					
JSC Electrosila (Electrosila)	St. Peterburg	Large-scale electric machines	25-1,200 MW	14	36.0	87 countries	Siemens-KWU Energomash	Yes
JSC Podolsk Power Engineering Works (ZIO)	Podolsk (Moscow region)	Boilers		14	19.6	Eastern Europe, Germany, China,		

JSC Krasny Kotelshchik	Taganrog (Rostov region)	Boilers	75-3,650 tons/hour	12	43.0	Russia, China, India, Germany, Pakistan, Iran	Unknown	No
JSC Ural Heavy Power Engineering Works (UETM)	Ekaterinburg	Synchronous diesel generators	520-1,400 kW	7	7.8	U.S. (has a rep.) Sweden, (has a rep.) Former Soviet Union, China, India, Eastern Europe, Middle East	Unknown	Yes
		Hydro-generators	100 kW - >50 MW					
		Hydrogen cooled synchronous condensers	100 and 160 MVA					
		Vertical synchronous and induction motors	315-8,000 kW					
		Horizontal synchronous motors	400-5,000 kW					
JSC Kaluga Turbines (KTZ)	Kaluga	Steam Turbines	2,5-35 MW	5	NA	Former Soviet Union, Eastern, Europe, Finland, Latin America	Siemens-KWU	No
		Driving turbines	500 kW-17 MW					
		Turbo-generators	17,5-23 MW					
		Geothermal steam turbines	1,7 MW electric 20 MW thermal					
		Geothermal modular power-generating units	20 MW					

Source: Compiled by the author from Danilenko (1998), UETM (2001), KTZ (2001), Producer Center DO (1999), Energomash (2001), Industry of Saint-Peterburg (2001), Belenergomash (2001), Russian Investors (1999)

In spite of the decrease in production output, many power-engineering companies were able to preserve engineering skills that allowed them to start designing better equipment. In addition, cooperation with foreign companies such as Siemens KWU or ABB helped these companies attract investments and modernize their equipment. For example, Siemens KWU invested $10 million in LMZ and $12 million in JSC Electrosila (Advance 1999). Joint ventures between foreign companies and Russian producers also helped Russia to win international tenders. For example, LMZ was chosen as a supplier of turbines for a Finnish power plant (Ambar 1999). The fact that LMZ has the German Siemens KWU as a joint venture partner may provide potential customers with additional confidence in the product. Another factor that helps Russia hold exports at their current levels or increase them is that Russian equipment is cheaper than foreign equipment. For example, turbines produced at LMZ are 35-40 percent cheaper than foreign turbines (Kotov 2001). There are no data on the actual qualitative performance of this equipment compared to the competing foreign turbines. Apparently, the quality is satisfactory since the Russian turbines are still being exported.

Overall, Russian power generating exports represent only a small share of total Russian exports. The main Russian exports in 2000 were oil, natural gas, metals, and pulp (AutoTransInfo 2000). The monetary values that power generation equipment contributed to the exports in 1996 through 1998 are presented in Table 5.3. In 1999, exports of these goods increased while exports of equipment of machinery equipment and equipment in general decreased by 4 percent. Statistics of the European Union imports and exports for 1996, the latest year available, show that Russia is not among the top ten countries exporting power-generating equipment and that the United States and Japan dominate exports. At the same time, Russia is one of the top exporters of fossil fuels and steel (Eurostat 1998). Successfully producing and marketing fuel cells can help Russia to change its image as a country that sells mostly natural resources, but this will not be easy.

Table 5.3 Russian Power Equipment Exports in 1996-98 (Year 2000 US$)

Russian exports in:	1996	1997	1998
Steam Generating Boilers	87,359	128,957	162,721
Steam/Vapor Turbines	52,227	33,556	68,321
Internal Combustion Engines	219,230	203,246	166,351
Engines Non-Electric	309,158	266,958	442,464
Rotating Electric Plant	128,874	135,059	126,030
Power Generating Equipment	335,425	391,626	394,299
Total	1,132,273	1,159,402	1,360,186
Percent in Total Exports	1.28	1.30	1.83

Source: Handbook of International Economic Statistics: Central Intelligence Agency, Directorate of Intelligence. The latest year available is 1998.

In addition to Energomash and power equipment producers that supply equipment to customers directly, three main companies are responsible for Russian equipment exports. The State Unitary Enterprise Foreign Economic Association, Technopromexport, was established in 1955, and since that time has implemented 400 power projects in 50 countries in Europe, Asia, and Africa. These projects included building thermal, hydro, and diesel power plants and constructing transmission lines and substations (Technopromexport 2001). The Foreign Economic Joint Stock Company, Zarubezhenergostroy (ZES), was established in 1975 as a part of the Russian Ministry

of Energy and since that time has constructed more than 240 power plants in over 30 countries in Europe, Africa, Asia, and the United States. Currently, ZES is the main contractor for both the Ministry of Energy and the main Russian energy utility, All-Russian United Energy Systems (RAO EES Rossii), (ZES 2001). Finally, JSC Energomashexport was established in 1966 as a state-owned organization and since that time has built power plants all over the world (Energomashexport 2001). These export companies often work under contracts with Russian equipment producers.

Traditionally, India and China are the main importers of Russian power plant equipment. While Table 5.2 suggests that Russia sells equipment to many countries, it seems that the Asian region is the most favorable for increasing exports. It is useful to look at Russia's exports to India and China in more detail.

ANALYSIS OF COUNTRIES: POTENTIAL MARKETS FOR RUSSIAN EXPORTS

A brief analysis of fuel cell markets and markets for Russian power generating equipment can help identify countries where Russia might sell its fuel cell technologies. It is too soon to make a quantitative analysis since Russia does not yet have commercially available fuel cell technologies, but it is useful to look at the forces driving consumers to buy new technology. Also, since fuel cells are a new and rather expensive technology, it is unlikely that markets for them will be large in the short term. Even if Russia is able to produce and sell only a few fuel cells, that would be a very important step in entering world markets. It is evident that in the near future, fuel cells will be used in niche markets such as for premium power, some cogeneration, or portable power. Even today, fuel cells are competitive in these markets and consumers are willing to install them. Studying and targeting such niche markets is important to help Russia better develop its marketing strategies and structure R&D in a way that improves technologies for these particular markets. Since examples of fuel installations are only available in developed countries, some assumptions about which customers in developing countries may install fuel cells may be flawed. It will be important to obtain more data on fuel cell installations in developing markets. Currently, the only example is an Argentinean company that bought a fuel cell to be installed in Brazil.

As mentioned earlier, analysis of world markets for fuel cells shows that Western Europe and North America will be the largest markets for stationary fuel cells with Asia the third largest. With mobile applications also included, Asia would be the second largest and Europe the third largest, but more information is needed to understand Russia's ability to market mobile fuel cells. It seems unlikely that Russia will be able to compete on North American markets since Russia does not sell much equipment there, and the largest fuel cell companies are already active. At the same time, UETM has a U.S. partner, Applied Engineering, which helps it market hydrogenerators (UETM 2001). Therefore, if Russian fuel cell manufacturers are successful in partnering with foreign companies, they might be able to enter North American markets. Western Europe will be the second largest market for stationary fuel cells. In Europe, many countries already spend a great deal of effort on fuel cell R&D, and it is very likely that they will commercialize fuel cell technologies before Russia is able to produce fuel cells. Therefore, Russia will be able to market its fuel cells in Europe only if Russian companies can produce them more cheaply. Another possibility is partnering foreign and Russian companies and

integrating Russian components into Western fuel cells. Though there might be many different sellers in this market, Russia's traditional trade partners for equipment in that region are the Scandinavian countries. This report analyzes Finland since it is a traditional Russian partner, and Finnish customers already buy Russian turbines. Possible applications for fuel cells include district heating systems, industries, banks, and hospitals. For example, combined heat and power (CHP) is widely used in Finland for heating residential houses and industrial facilities. Since cogeneration is very suitable for fuel cell applications, these customers might want to use fuel cells. Industrial companies can sell excess electricity to the grid, which will facilitate fuel cell introduction. The Finnish electric utility, Fortum Oy, does not produce fuel cells but is interested in the technology. It has already installed a fuel cell produced by another company in a house for cogeneration purposes. On the one hand, Russia did sell equipment for a cogeneration plant in Finland; on the other hand, Fortum Oy has a well-established business in Russia. Therefore, a potential partnership between Fortum Oy and a Russian producer might help Russian fuel cells or their components reach targeted Finnish consumers.

India and China are the largest countries in Asia and they likely will dominate Asian demand. Russia has substantial markets for its power equipment in these countries. Probably neither Chinese nor Indian companies will produce fuel cells by themselves initially and nor will they buy them from other countries. This report analyzes India in more detail since it already buys Russian photovoltaic equipment. Potential customers for Russian fuel cells include industries that can produce more electricity onsite and can sell the excess electricity or heat to the grid. Since Indian electric grids are not very reliable, fuel cells might also be used as back-up generators. Other potential consumers are banks or computer industries. Some residential customers might want to install fuel cells but for this to occur, governmental support will be crucial. The Indian Ministry for Non-Conventional Sources of Energy, which was very successful in developing renewable energy, can play a key role in promoting fuel cell technologies for residential purposes. This Ministry does fund fuel cell R&D.

Finally, South America might not become the largest market for fuel cells but some countries there are already buying them. Argentina was the first country to acquire a fuel cell, and since Russia sells country power equipment to Argentina already, it is useful to look at Argentina in more detail. Potential customers in Argentina include industrial facilities that use cogeneration, luxury hotels, and residential customers in remote areas. As in India, Argentina has had positive experience in installing renewable energy technologies in remote rural areas. Such experience will be useful in promoting fuel cells.

Different customers will have different motives for buying fuel cell technologies. For example, Indian power grids are very unreliable and have large losses; therefore, Indian customers may want to invest in onsite power sources. Scandinavian companies can choose fuel cells for applications that require a high-quality uninterrupted power supply, such as for banks, hotels, and hospitals. In addition, industrial companies and energy intensive facilities such as paper mills or chemical combines that sell excess electricity to the grid might want to install fuel cells. Several criteria are used to analyze customer demand for fuel cells in the energy sector:

1. Electricity consumption, production, and fuels used. Currently, hydrogen produced from natural gas is most often used as a fuel for fuel cells. A country's access to natural gas

and, in particular, customer access to natural gas in remote areas is important in implementing fuel cell technologies. Developing technologies to extract hydrogen from coal will partially solve this problem.

2. Off-grid applications. Fuel cells might provide onsite power and heat for people that live in remote areas and/or do not have access to power grids. Natural gas availability will be important. Producing hydrogen from a renewable energy source will solve this problem.

3. Industrial applications (offshore oil or gas production). For example, Argentina has potentially large offshore oil deposits, and companies that will develop oil fields can choose fuel cells to supply power for some of the oil-drilling infrastructure (similar to the specific applications described for the Russian oil and gas industries earlier in this assessment).

4. Reliability of power grids. Customers might want to invest in fuel cells for onsite generation or use them as back-up generators instead of paying for unreliable grids up front or in lost productivity.

5. Availability of cogeneration. Fuel cells can be used for producing both power and heat. Industrial companies or even residential consumers might invest in cogeneration using fuel cells if they are allowed to sell excess electricity to the grid. Finland is a good example.

6. Environmental problems. Fuel cells produce much lower emissions than conventional fossil-fired technologies, and customers might prefer switching to a more efficient technology than paying emissions fines. Strict air quality regulations will help promote fuel cells as a solution to environmental problems.

It is useful to look at countries using these criteria. As fuel cell technologies become more affordable, Russian markets will include not only India, Scandinavia, and Latin America but other European or African countries as well.

India

Electricity use in India has more than doubled in the last 10 years and has grown faster than the gross domestic product. The power sector represents 40 percent of total primary energy use in India, including almost 70 percent of coal use. Despite the intensive investments in the power sector, electricity demand outpaces India's capacity to generate power (Shukla et al. 1999).

Coal still contributes a large share to power generation in India. India has large reserves of coal but does not have large domestic sources of oil or natural gas. Natural gas is slowly gaining more prominence in generating electricity. India eased restrictions on foreign investments to the electricity sector, and many investors preferred constructing natural gas power plants that have lower capital requirements and shorter construction periods. Since 1988, natural gas production increased by 150 percent (Shukla et al. 1999). To introduce fuel cells, it is important for India to

develop its natural gas resources. In addition to coal and gas, the Indian power sector has a substantial share of hydropower generation and several nuclear power plants.

India is investing heavily in new capacity to generate electric power, as current generation is seriously below peak demand. Although about 80 percent of the population has access to electricity, power outages are common. The government has targeted capacity increases of 47,000 MW during the period covered by the current Five-Year Plan, 1997 –2002, and 111,500 MW by 2007. As of 1999, India's total installed power generating capacity was 103,445 MW (EIA 2001). The Indian government is encouraging the construction of "mega-projects," defined as plants with a capacity of more than 1,000 MW for thermal plants and more than 500 MW for hydroelectric plants.

India's nine state electricity boards (SEB) that run the power distribution infrastructure and most current generating capacity are in poor financial health, which has limited their ability to fund investment in new infrastructure. One reason is the sale of power at subsidized rates, which do not cover costs (particularly to the agricultural sector). Another problem is the high level of transmission and distribution losses. Average utilization of generating capacity stands at only slightly more than 50 percent (EIA 2001). Since Indian power grids are so unreliable, some companies might invest in fuel cells to produce onsite electricity but it is evident that their poor financial situation will prevent them from large-scale installation of this technology. Government incentives will be of great help in the initial stage.

The Indian government is undertaking power sector reforms that include unbundling of energy services, privatization of power plants, and regulatory reforms. Onsite power generation and cogeneration units received incentives such as the right to sell surplus power over the grid to third-party customers (Shukla et al. 1999). Such incentives can spur investments to fuel cell cogeneration technologies since investors can reimburse their spending by selling electricity and heat.

Some energy-intensive industries such as aluminum, steel, and fertilizers have already started investing in onsite power generation. In 1995, onsite generation contributed 12 percent to total installed capacity. Onsite generation continues to grow at an annual rate of 8 percent. Just over half of this capacity is coal and two-fifths is oil. Natural gas onsite generation currently provides only 8 percent to total installed capacity (Shukla et al. 1999). For onsite generation, fuel cells can play an important role. It is also important that industrial companies have more capital to invest in new technologies than does the SEB. If these companies are allowed to sell excess electricity to the grid, fuel cells become more economical.

While India currently does not have a unified national power grid, the country plans to link the SEB grids eventually and has set up a state company, Powergrid, to oversee the unification. India also plans to establish national and state-level regulatory bodies to set tariffs and promote competition (EIA 2001).

In July 1998, the Indian government announced it would ease rules related to foreign investment in the power sector. Foreign investors are now allowed to take 100 percent equity stakes in

projects of up to 15 billion rupees (about $350 million). The earlier policy had allowed for only up to 74 percent foreign equity (EIA 2001).

India does invest in new technologies including fuel cells. India recognized the importance of increasing the use of renewable energy sources for achieving a sustainable energy base in the early 1970s. In 1992, India established an independent ministry, the Ministry of Non-Conventional Energy Sources (MNES) to promote renewable energy. During the past quarter century, India has emphasized the development, trial and induction of a variety of renewable energy technologies for use in different sectors (Pal 2000). At the beginning, the main focus of the MNES was to find niche markets for renewable applications. Later, the focus shifted to grid-connected commercial applications. In 1997, renewable sources included 917 MW of wind power, 134 MW of small hydroelectric capacity, 42 MW of biomass-fired plants, and 2 MW of solar photovoltaic units (Shukla et al. 1999). These numbers suggest that new markets can grow rapidly. Fiscal incentives for the renewable energy sector include a 100 percent depreciation allowance during the first year of operation (except for hydro schemes), an excise duty waiver for most renewable energy technologies and their components, and exemption from central and state sales taxes (Pal 2000).

Fuel cells may follow the same development path as renewable sources of energy, and some programs to develop fuel cell technologies are already under way. MNES is testing five types of fuel cells but priority is given to SOFC and MCFC for cogeneration application (MNES 2001). In addition to MNES, the Tata Energy Research Institute is testing an integrated gasifier-MCFC (IG-MCFC) that offers a clean and efficient route for power generation from coal. An MCFC was assembled, and its performance was tested with simulated coal gas. The output and the stability were found to be comparable to that with conventional feed gas. It was also observed that switching from one type of feed gas to another had only a marginal effect on the cell performance (Matur et al. 1999).

A shift to a distributed power generation paradigm could gradually eradicate or improve such aspects in rural electrification, utilization, and reliability. The synergy between fuel cells distributed power generation and fuel cells in public transport could set a successful demonstration for the technology.

Since Russia sells photovoltaic equipment to India, Indian customers such as industrial facilities also may be willing to buy fuel cells for onsite generation. In addition, banks and the computer industry might want to install them. If MNES is willing to support fuel cells financially through tax incentives, some wealthy residential customers might also be interested in buying fuel cells.

It is also worth mentioning that environmental concerns are a driving force for fuel cell development in India. Since India still burns mainly coal, air pollution is a serious problem and emissions of sulfur dioxide (SO_2) and nitrogen oxides (NO_x) continue to grow. Large hydropower plants and nuclear energy can reduce emissions but developing these technologies raises other environmental concerns.

India is another country where Russia has already established a market for its power equipment. For example, RAO EES Rossii proposed upgrading 16 existing thermal power plants that the

former Soviet Union constructed. Technopromexport will provide the upgrade. Russia and India established an intergovernmental commission on cooperation that should facilitate implementation of projects between the two countries. In addition to upgrading existing power plants, Russia plans to participate in tenders to construct the following power plants (Interfax 2000):

1) 500-MW Sanjay Gandhi Extension Project;

2) 500-MW coal power plant at Vijayanagar; and

3) 210-MW power unit at Raichur Thermal Power Plant.

Russian power generating companies have already established good business relationships in India. For example, Belenergomash is represented in India through the company R.G.E. Agencies Pvt. Ltd (R.G.E.Agencies Pvt. Ltd 2001). In addition, Russia has a market in India for alternative power equipment. For example, Russian companies supply $100,000-200,000 worth of photovoltaic equipment annually (Degtyaryov 2000). This means that India may want to buy Russian fuel cells, another alternative technology, if the equipment is commercialized. Russia is also interested in constructing transmission power lines proposing a new high-voltage transmission line through India (Interfax 2000).

China

China is similar to India in population, coal dependency, and the expected scale of power requirements in the decades to come. The country is looking for alternative energy supplies, notably natural gas, either piped or through liquefied natural gas, but is limited by its customer base. Gas turbines along with fuel cells could help raise natural gas demand to levels that would justify infrastructure investment. China is also eager to develop nuclear energy capacity, which may effect adoption of fuel cells in the long term as nuclear energy clearly focuses development on centralized power and grid transmission.

China maintains a large plastics and resins industry driven by a demand for higher quality products. Sophisticated, numerically controlled machinery is preferred in the industry, which is energy and heat-intensive and may provide a market for certain CHP technologies, perhaps including fuel cells.

Russia exports equipment to China under intergovernmental agreements that include the Agreement on Economic and Technical Cooperation on Constructing and Modernizing Industrial Facilities in the People Republic of China signed on July 10, 1985. Energomashexport and Technopromexport are the main exporters of Russian power generating equipment to China. Overall, Russia exported $870 million worth of equipment for different power plants, excluding nuclear, in 1998 alone. It is important to note that China is changing its import rules. While Russia, until recently, supplied all equipment under direct agreements, China currently prefers to buy equipment and construct power plants through international tenders (Center of Development for Cooperation with China 1999). If this is the case, Russia will need to create partnerships with foreign companies in order to compete on the Chinese market for fuel cells. Table 5.4 shows the

main power plants Russia has constructed in China. As the table shows, Russia is active in China and China is ready to buy Russian equipment. Russia not only exports but also installs equipment. Several equipment manufacturers continued exports in 1999-2000. For example, JSC Turbomotor works (Ekaterinburg) is supplying four turbines for thermal power plants, and Energomashexport is exporting heat boilers for residential heating systems (Center of Development for Cooperation with China 1999).

Table 5.4 Main Russian Power Plant Projects in China

Thermal Power Plants (TPP)	Equipment	Supplier	Cost (million US$)	Year
TPP Nankyn	2 units x 300 MW	Technopromexsport	7.3	1998-1999
TPP Yinkou	2 units x 300 MW			
TPP Tzisyan	2 units x 500 MW			
TPP Imin	2 units x 500 MW			
TPP Suijun	2 units x 800 MW			
TPP Huaneng Peking	2 units (320 MW)	Energomashexport	12.7	1998
TPP Huaneng Peking	Turbines	JSC Turbomotor Works (Ekaterinburg)	7	1998
TPP Loyan				
TPP Chengdu				
TPP in Lanzhou				
TPP Loyan	Transformers	JSC Transformator JSC Sovelectro	1.5	1998
TPP Chengdu				

Source: Center of Development for Cooperation with China 1999

Finland

In addition to China and India, Russia sells power equipment to Finland. For example, in 1999, LMZ won a tender to supply a three-casting steam turbine for a new multifuel cogeneration power plant in Finland (Alholmenskraft 2000). This power plant will produce steam (100 MW) and electricity (200 MW) to a pulp and paper production facility and in addition will supply 60 MW of district heat to a nearby city. LMZ also exports power units to Finland that are based on low-power gas turbines (16 and 60 MW) and combined-cycle installations. Such units currently generate 28 percent of Finland's electricity (Kotov 2001).

Finland joined the European Union (EU) in 1995, and its energy and environmental policies are compatible with EU's objectives. EU membership can play a positive role in developing fuel cell technologies in Finland since the EU has a common R&D strategy to commercialize fuel cells. EU initiatives to open energy markets for competition, reduce air pollution by increasing the share of renewables, and introducing new technologies also have a positive influence on the development of Finland's energy markets.

The Finnish electricity supply industry produced some 70 TWh of electricity in 1997. Of this, 23 TWh (35 percent) was produced in cogeneration plants. Of the remainder, 12 TWh (18 percent) came from hydropower, 21 TWh (30 percent) from nuclear, and 11 TWh (17 percent) from fossil fuels used in conventional condensing power plants. Domestic production was supplemented by

imports from Sweden, Russia, and Norway to yield a total supply of 74 TWh in 1997 (IEA 1999).

CHP production is applied widely in Finland for providing heat to communities and for industrial processes. Some 53 percent of cogenerated power was produced in district heating plants in 1997, and about 47 percent in industrial CHP plants that same year.

District heating supplies 27 TWh of heat, about one-half of the total demand for space heating in Finland. Slightly more than three-quarters of district heat is cogenerated. Approximately one-fifth of energy consumption is used for space heating in Finland (IEA 1999). Such a high share of cogeneration presents an opportunity for implementing fuel cell technologies. Industrial companies that sell excess electricity to the grid might be interested in installing fuel cells.

Finland has the largest share of energy production from renewable energy sources among European countries. In 1997, the share of renewable energy sources in installed capacity in Finnish thermal power electric stations was 20.9 percent (17.7 percent combustible renewables and wastes and 3.2 percent hydro). Their combined share of electricity output was higher: 29.5 percent from hydro and 11.8 percent from combustible renewables. Combustible renewables are wood-based fuels such as industrial wood residues (wood chips, bark, and sawdust), black liquor, and firewood. Finland's wood use is the highest in the industrialized world (IEA 1999).

Finland has favorable wind conditions on the coast and in its archipelagos and fell areas. Its wind capacity increased considerably in recent years: in 1992 capacity was below 2 MW and generation stood at 2.4 GWh, while in 1997 capacity was 12 MW and generation 16.6 GWh. Because of the location of some of this wind resource, Finland has had to develop arctic wind technology. This capacity expansion was a result of a wind energy promotion program launched by the Ministry of Trade and Industry in 1993, which aims to reach a total wind capacity of 100 MW in Finland in 2005 (IEA 1999).

There are approximately 200 small-scale hydropower plants with capacities ranging from 50 kW to 10 MW in Finland. These plants are mainly owned by electricity distributors and industry, and they generate some 0.9 TWh or about 9 percent of hydropower, amounting to little more than 1 percent of total electricity generation (IEA 1999).

The Ministry of Trade and Industry has started preparing a new comprehensive program to promote renewable energy. The program will cover all forms of viable renewable energy in Finland. It will act as a national implementation program of the strategy set out in the EU's white paper on renewable energy sources that proposes an increase of the share of renewable energy (IEA 1999).

Such a large share of renewables suggests that Finland is ready to invest financially in new technologies. All renewable technologies were recently just as expensive as fuel cells are currently, but extensive R&D programs made them competitive with conventional technologies. It is possible that some companies, such as industries that use cogeneration, will be willing to buy and install fuel cells. Other potential niches include banks, hospitals, and data processing

centers that are ready to pay for uninterruptible power. Examples of fuel cell installations in the United States suggest that currently these are the most important stationary fuel cell applications.

Over the past few years, Finnish energy markets have undergone a period of reform and restructuring. The reform introduced competition into the electricity market in 1995, successive adaptation to competition in the domestic market, and closer integration with the Nordic electricity market. It also brought competition to the natural gas market in full compliance with the EU Directive. Finally, Fortum Oy was created in 1998 in a merger of Neste, Finland's largest oil company, and IVO, its largest electricity supply company (IEA 1999).

Climate change is another important issue in Finnish energy policy. The country has already exploited much of its energy-efficiency potential, partly because of its cold climate and scarcity of indigenous energy resources but also because there is strong support for environmental protection in Finland. In 1990, Finland became the first country in the world to introduce a carbon tax. Finland also has one of the highest shares of CHP production in the world. Carbon dioxide emissions, however, continue to rise, and Finland is looking for ways to address this problem. Greater use of natural gas instead of oil or coal, especially in electricity and heat production, could be a promising strategy, provided that the gas market can deliver the additional quantities and appropriate incentives for gas use are in place (IEA 1999).

Finland does have an interest in developing or testing fuel cell technologies. The Ministry of Trade and Industry serves as a focal point for implementing a fuel cell research, development, and demonstration strategy. The strategy has the following main goals (EU 2000):

1. Electricity generation and cogeneration at large (100 kW – 50 MW) and medium (5 kW – several MW) scales for industrial and residential purposes

2. Development of transport applications

3. Production of power for portable devices and equipment located in remote areas.

All three areas are important for Finland, but probably the first and third goals have the highest priority. Finland is the most northern and sparsely populated country in Europe with 1.6 percent of the population living north of the Artic Circle. For remote areas with access to fuel, fuel cells can provide reliable power. Fortum Oy has already bought and tested a cogeneration fuel cell unit in a residential heating system.

Finland does not have indigenous natural gas reserves and imports all gas from Russia. Natural gas networks are well developed only in the south of the country. This can limit fuel cell use unless technologies to produce hydrogen from renewable energy are developed.

Argentina

Argentina has one of the most competitive deregulated power sectors in South America. Since 1991, the government has pursued an aggressive privatization program in tandem with creation of an open electricity market. Privatization and competition have brought foreign investors and

project partners attracted by the economic growth in the country. Today, power generation capacity generally satisfies domestic demand, but there remain some remote areas that have yet to be connected to the national grid (EIA 2000).

Argentina relies mostly on hydropower and natural gas to fuel its electricity sector. In 1998, the country had 21.8 GW of installed generation capacity, of which about 53 percent was fossil fuel-based (primarily natural gas), 42 percent hydroelectric, and about 5 percent nuclear. Electric generation in 1998, which totaled 75.2 billion kWh, was 48 percent hydropower, 42 percent thermal, and 10 percent nuclear (EIA 2000). Natural gas use has grown rapidly since 1980 and currently constitutes 45 percent of Argentina's primary energy supply (Bouille et al. 2000).

Argentina favors developing new technologies. For example, following power sector reform, advanced combined-cycle turbine systems now provide almost 3,000 MW of power, growing from 0 to 13 percent of the power supply over the last few years (Bouille et al. 2000). Argentina also has wind power and photovoltaic installations. Photovoltaics are being installed in remote areas. The cost of solar photovoltaic power is $5,000 per kW of installed capacity (Bouille et al. 2000), which is comparable to the cost of fuel cells. Therefore, it is possible that some companies may be willing to install fuel cells for residential power production in remote areas if fuel is available. Another potential application is offshore oil production. It is expected that Argentina might have large offshore oil deposits on the scale of those in the Northern Sea (EIA 2000). Luxury hotels are another example where fuel cells can be used.

Environmental problems will probably play less of a role in developing fuel cell technologies in Argentina than in India or China. For example, SO_2 emissions have remained at their 1939 level despite a ten-fold increase in thermal generation, mainly because Argentina replaced coal with hydropower and natural gas (Bouille et al. 2000). At the same time, fuel cell technologies can help Argentina switch from large-scale hydropower plants that have significant environmental impacts to smaller-scale and more efficient distributed power generation.

While Argentina does not have a fuel cell research program, it is interested in acquiring and using this technology. An Argentinean company, Sieco S.A., an IFC distributor, bought three PC25 power plants to be installed in Brazil for producing heat and electricity for residential customers (IFC 2001).

Russia has supplied power equipment to Argentina. In 1999, Energomashexport supplied ten 100-MW power transformers for the Salto Grande Hydroelectric Power Station and supplied turbines manufactured at LMZ to two other hydropower stations in Argentina. The company won tenders to supply equipment and established a joint consortium with Siemens-KWU. Energomashexport also supplied equipment for Colombian hydropower plants (Energomachexport 2001).

Exports to Other Countries

Russia has supplied equipment for hydropower plants to Sweden. For example, between 1994 and 1999 UETM supplied three hydrogenerators ranging between 8,000 and 20,000 kVA in capacity (UETM 2001).

Russia has also historically supplied most of the former Soviet Union countries with power equipment. Once these countries recover from their economic crises, they can be considered perspective consumers of Russian fuel cells as well. Multilateral banks, which currently support energy efficiency and climate change mitigation activities in this region, could potentially facilitate financing for fuel cell projects in the former Soviet Union.

In summary, Russia is able to produce high-quality equipment for quite diverse markets, selling turbines, boilers, and hydrogenerators to four continents. While Russian equipment exports represent a small share of total Russian exports, some power equipment producers have been able to actually increase exports. In monetary terms, Russia has substantial sales of equipment to China and India. Fuel cells are still expensive and will continue to be expensive in the near future. However, fuel cells are already competitive in some niches. For example, in cogeneration, when consumers are able to sell excess electricity to the grid, or when customers (banks, hospitals, data processing centers) need high-quality uninterruptible power, fuel cells compete with conventional technologies. Identification of such niches in a country is important. Foreign consumers have demonstrated confidence in Russian equipment and may want to buy new technology from Russia. Russia does export equipment to regions that are expected to be major markets for fuel cells – Western Europe and Asia – and has distribution networks in some countries. India and China are good examples.

On the negative side, Russia still exports mostly large-scale equipment. Only India has a relatively stable market for Russian photovoltaics. Large power equipment producers and three export companies dominate Russian markets and Russian exports. Since fuel cells are a new technology, mostly being used for small-scale applications, it is difficult to make a direct link between Russia's ability to sell large-scale and small-scale equipment. More information should be collected about independent producers of new equipment. Some countries such as China or India have had special export agreements with Russia that facilitated equipment sales. Currently, it seems that all countries prefer to organize international tenders to choose equipment suppliers or power plant builders. In some cases, Russia is willing to provide financing for installing power plants, which makes Russian companies more competitive, but this is limited to nuclear power plant construction. Such a strategy can help promote new technologies but it is too soon to say if Russian banks will be willing to finance new and untested technologies. Cooperation with foreign financial institutions will be useful. Partnerships between foreign companies and Russian power equipment producers will help Russia be more competitive in international markets. This is especially true for fuel cells, a new and not fully developed technology. A few companies currently dominate fuel cell markets and it will be difficult for Russian companies to enter these markets without partnering with foreign companies. Russian equipment producers understand this and are creating joint ventures with foreign companies or making them their shareholders.

RECOMMENDATIONS

While still an expensive technology, fuel cells are already commercially viable in niche markets such as cogeneration in certain types of commercial buildings. The market for fuel cells is expanding rapidly. Entering fuel cell markets will help Russia diversify its exports and expand its ability to produce and market new technologies. Russia's participation could be important for the international community since Russian scientists are able to develop low-cost fuel cell

technologies. Analysis of potential demand for Russian fuel cells is crucial for targeting future customers and therefore increasing sales and structuring R&D programs. The following recommendations might be useful in increasing awareness and Russia's potential to export fuel cells in the future:

1. Assess the feasibility and cost-effectiveness of organizing fuel cell production in Russia. Explore opportunities for the production of commercial fuel cells with and without foreign partnerships.

2. Create partnerships with foreign companies. Partnering with large companies will greatly enhance Russia's abilities to market its fuel cells. Such partnerships will be mutually beneficial. Foreign companies will get access to low-cost Russian technologies and scientists' expertise. Russia will receive more investments in fuel cell technologies and better access to foreign markets. Partnerships with foreign companies are feasible since many of them already work in Russian markets. For example, Siemens-KWU is a shareholder of several power equipment producers. In addition, many foreign companies that work in Russia already have experience in developing fuel cells.

3. Involve traditional power equipment producers and export companies in marketing fuel cells. While companies that belong to Energomash mostly produce traditional large-scale equipment, some are becoming interested in developing new technologies such as more efficient gas turbines or equipment for small hydropower plants. These companies already have good access to foreign markets and many of them have established good distribution networks. They might be willing to market or even produce fuel cells. The same is true for export companies such as Energomashexport.

WORKS CONSULTED

ACEEE. 2001. *Fuel Cell Manufacturers and Expected Products*. American Council for an Energy-Efficient Economy. Washington, D.C. Available on the Internet: http://www.aceee.org/chp/fuelcell-list.html.

Advance .1999. *Power Producing Equipment*. Financial and Investment Company "Advance". *In Russian*. Available on the Internet: http://www.advance.ru/reports/em/emach.htm.

Alholmenskraft. 2000. Alpo Project. Available on the Internet: http://www.alholmenskraft.com/English/project.html.

Ambar. 1999. *Crisis Management of Industrial Facilities*. In: "News of Financial Legislation in Russia and Economic News from Saint Petersburg." Published on September 29, *1999*. Russian Internet News Service "Ambar". *In Russian*. Available on the Internet: http://www.ambar.spb.ru/@alt/taxnews/990929.htm.

Arthur D. Little. 1998. *Profiles of Leading Renewable Energy Technologies for the Massachusetts Renewable Energy Trust*. Cambridge, Massachusetts. Also available on the Internet: http://www.mtpc.org/massrenew/Doc2part1.pdf.

AutoTransInfo. 2000. *Independent Newspaper: The Main Commodity in Russian Exports Are Raw Materials*. Published on July 10, 2000. *In Russian*. Available on the Internet: http://www.autotransinfo.ru/tr_news.asp?MsgID=6853&q=&Type=0&m=2&p=6.

Belenergomash. 2001. JSC "Belgorod Power Engineering Works." *In Russian*. Company's Website: http://www.belenergomash.ru/.

Borenstein, S. 1999. *Businesses, Homes Are Getting Their Own Power Plants.* Published July 6, 1999. Mercury News Washington Bureau. Washington, D.C. Available on the Internet: http://www0.mercurycenter.com/svtech/news/indepth/docs/power070799.htm.

Bouille D., H. Dubrovsky, W. Chandler, J. Logan, and F. Croisman. 2000. *Developing Countries and Global Climate change. Electric Power Options in Argentina*. Prepared for Pew Center on Global Climate Change. Washington, D.C.

Bukharin O., F. von Hippel, and S. Weiner. 2000. *Conversion and Job Creation in Russia's Closed Nuclear Cities; An Update, based on a Workshop held in Obninsk, Russia, June 27-29, 2000.* Program on Nuclear Policy Alternatives of the Center for International Studies and the Center for Energy and Environmental Studies, Princeton University, November 2000.

Business Yahoo. 2001. *H Power Residential Fuel Cell Unit Being Field Tested in Finland by Fortum, Oy, a Major International Energy Company.* Press Release. March 19, 2001. Available on the Internet: http://biz.yahoo.com/bw/010319/2496.html.
Center for Development of Cooperation with China. 1999. *Technical Cooperation Between Russia and China*. *In Russian*. Available on the Internet: http://www.cl.spb.ru/kcm/rus/bisness/eco/china10.htm.

Center of Development for Cooperation with China 1999. More information on China's power sector can be found at http://www.eia.doe.gov/emeu/cabs/china/china97.html.

Danilenko V.G. 1998. *JSC Podolsk Engineering Works: Business Review*. In: "Technological Equipment and Materials," Issue 4, April 1998. *In Russian*. Available on the Internet: http://www4.mte.ru/www/toim.nsf/7636af9bffa155fac32568650047e3d5/87f7ba1bbdb74207c325661200367d47!OpenDocument.

Degtyaryov. 2000. *Russian-Indian Cooperation in the Energy Field*. Industrial News, Issue 2(3), March 11-20, 2000. *In Russian*. Available on the Internet: http://cryocor.ru/pv/3/9.htm.

U.S. Department of Energy. 2000. *DOE Research and Development Portfolio*. *Volume 1. "Energy Resources"*. U.S. Department of Energy. Washington, D.C. Also available on the Internet: http://www.osti.gov/portfolio/Energyfinal.pdf.

EIA. 2000. *Country Analysis Brief. Argentina*. Energy Information Administration. Washington, D.C. Also available on the Internet: http://www.eia.doe.gov/emeu/cabs/argentna.html.

EIA. 2001. *Country Analysis Brief. India*. Energy Information Administration Washington, D.C. Also available on the Internet: http://www.eia.doe.gov/emeu/cabs/india.html.

Energomash. 2001. JSC "Energomash Corporation." Company's Website: http://www.energomash.ru.

Energomashexport. 2001. Company's Website: http://www.energomachexport.com.

European Union. 2000. *A Fuel Cell Research, Development, And Demonstration Strategy For Europe Up To 2005*. Brussels, Belgium. Also available on the Internet: http://eva.wsr.ac.at/opet/fcstrategy.htm.

Eurostat 1998. "*External and Intra-European Union Trade." Statistical Yearbook 1958-1996*. Brussels, Belgium.

Fuel Cell Energy. 2001. *FuelCell Energy Partner to Begin Operating Direct Fuel Cell Power Plant In Germany.* Press Release. Fuel Cell Energy, Inc. Danbury, Connecticut. Available on the Internet: http://www.fce.com/#.

IEA. 1999. *Energy Policies of IEA Countries Finland. 1999 Review.* International Energy Agency. Paris, France. Also available on the Internet: http://www.iea.org/pubs/reviews/files/finland/index.htm.

IFC (International Fuel Cells). 2001. *UTC's International Fuel Cells To Deliver Three PC25 Power Plants To Sieco S.A.; First Fuel Cells In Latin America*. Press Release. Available on the Internet: http://www.ifc.com/news/archive/040901.shtml.

Industry of Saint Petersburg. 2001. *Power Engineering. JSC "Electrosila."* Available on the Internet: http://energy.internord.ru/articl_e/165030_en.html.

Interfax. 2000. *RAO EES Rossii Proposed to Modernize Power Plants in India*. Published on January 25, 2000. *In Russian*. Available on the Internet: http://www.sibene.elektra.ru/news/press/2000/jan_25.html.

Investment Herald. 1999. *Exports of Russian Power Engineering Equipment.* Published by Foreign Investment Promotion Center on January 11, 1999. *In Russian*. Available on the Internet: http://www.fipc.ru/fipctest/vestnik/glavy/jan_feb/Fourth.html.

Kotov, A.I. 2001. *Power Engineering Industry of St Petersburg on the Threshold of A New Millennium*. Administration of Saint Petersburg. Also available on the Internet: http://energy.internord.ru/articl_e/cont2_en.html.

KTZ. 2001. *Production Range and Specifications.* JSC "Kaluga Turbine Works." Available on the Internet: http://www.admobl.kaluga.ru/New/Industry/Engind/KTZ/productseng.htm.

LYCOS Network E-wire. 1999. *Anchorage Mail Processing Center to be Powered by World's Largest Commercial Fuel Cell System.* August 18, 1999. Available on the Internet: http://ens.lycos.com/e-wire/August99/18aug9909.html.

MAP. 1998. *Russian Market of Power Engineering Equipment*. Russian Ministry on Antitrust Policy and Market Support. *In Russian*. Available on the Internet: http://www.maprus.ru/market/en-equip.html.

Matur, A., S. Bali, M. Balakrishnan, R. Perumal, and V.S. Batra. 1999. *Demonstration of Coal Gas Run Molten Carbonate Fuel Cell Concept*. International Journal of Energy Research 23(1999): 1177-1185. Also available on the Internet: http://www.teriin.org/division/eetdiv/che/docs/abs01.htm.

Miller, W. 2001. *Hydrogen and Fuel Cell Energy for the Future Globe USA*. Presentation in the U.S. Congress on March 28, 2001. Washington, D.C.

MNES. 2001. *Annual Report 1999-2000*. Indian Ministry for Non-Conventional Energy Sources. New Delhi, India. Also available on the Internet: http://mnes.nic.in/frame.htm?publications.htm.

Pal, P. 2000. *Policy Measures to Promote Renewable Energy Technologies in India.* Tata Energy Research Institute, India. Available on the Internet: http://www.ne.jp/asahi/spena/energy-net/2000/papers/prosanto.htm.

Perkins, T. 2001. *Siemens Developing Solid-Oxide Fuel Cells.* Office.com, March 9, 2001. Available on the Internet: http://www.office.com/global/content/article/printme/0,3232,22717,00.html.

Polit.ru 2000. *Possibilities to Increase Russian Exports Are Exhausted Thinks Ministry for Trade*. Published on February 23, 2000. Web-based Russian News Channel "Polit.ru." *In Russian*. Available on the Internet: http://www.polit.ru/printable/183515.html.

Producer Center "DO." 1999. *JSC "Krasny Kotelshchik." Who Is Who in the City of Rostov-On-Don And Rostov Region. Information Materials*. Available on the Internet: http://www.icomm.ru/home/do/oglav/g5/krkotel/index.htm. *In Russian.*

R.G.E.Agencies Pvt. Ltd 2001. Company's Website: http://business.vsnl.com/rge_agencies/.

Russian Investors. 1999. Profiles of Russian Power Engineering Companies. Available on the Internet: http://www.investors.ru/4315.html.

Shukla, P.R., W. Chandler, D. Ghosh, and J. Logan. 1999. *Developing Countries and Global Climate Change. Electric Power Options in India*. Prepared for Pew Center on Global Climate Change. Washington, D.C.

Siemens KWU. 1999. Press release. Available on the Internet: http://w4.siemens.com/kwu/e/news/kwu014e.htm.

Technopromexport. 2001. Company's Website: http://www.tpe.ru.

UETM. 2001. JSC "Ural Heavy Power Engineering Works." Company's Website: http://www.uetm.ru/.

U.S. Coast Guard. 1999. *Marine Fuel Cell Analysis. Final Report. September 1999*. Washington, D.C.

Virtual Petersburg. 2001. *LMZ Finalized Industrial Results For 2000*. February 22, 2001. Available on the Internet: http://www.vp.ru/common/new_content/print_article.asp?aid=9412&ids=1&asID=9.

ZES. 2001. JSC "Zarubezhenergostroy." Company's Website: http://www.zes.co.ru/.

CHAPTER 6: CONCLUSIONS AND TAPPING THE FUEL CELL MARKET

POLICY

While ultimately, fuel cells' success will depend on technological progress, demand and competing technologies, policy can play a role in stimulating the fuel cell market, particularly in its early stages. The Russian government can play an important role in several ways:

- Implementing policies to promote independent power and ensure open access to the grid. This would allow even small producers of distributed power to sell excess power to the grid.
- Developing a favorable tax climate for fuel cells. This could include a reduction in value added tax and import duties for fuel cells. A related issue is streamlined import procedures for fuel cells to ensure that fuel cell shipments do not get bogged down at customs.
- Proactively preparing standards and certification procedures for fuel cells to ensure that equipment permits do not become a barrier, particularly in the buildings sector.
- Providing targeted assistance to stimulate investments through publicity, loan guarantees, and other investment-related programs.
- Sponsoring new fuel cell R&D in Russia and encouraging private sector R&D collaboration, including with leading fuel cell companies globally.

MARKETING STRATEGIES

As with developing any new technology, commercializing fuel cells entails both financial and technical risks. The fuel cell literature focuses on technical risks; however, the most significant risks during commercialization may well be financial. Successful commercialization requires an integrated management of these risks and a ramping up in production to lower costs and increase market penetration.[1]

To successfully commercialize fuel cells, technology developers should follow a market-driven commercialization strategy that identifies high-value entry markets while minimizing the financial and technical risks of market entry. One way of reducing these risks, both for vendors and end-users, is to start by promoting small-scale systems for high-value stationary applications. Focusing on small-scale systems will lower initial capital costs for production (and for end users). These capital costs reductions will accelerate commercialization through market-pull as fuel cell systems become progressively more viable, starting with various high-value stationary, and eventually, high-volume mobile applications.

The combination of small- or medium-size fuel cells, high market values, low development and demonstration costs, low market entry costs, and the availability of off-the-shelf balance-of-system components provides a low financial and technical risk scenario for fuel cell commercialization.

---

[1] This section on marketing strategies draws heavily on two sources, seeking to apply them to the situation in Russia. The sources are "Fuel Cell Economics" by the Energy Systems Research Unit in the Department of Mechanical Engineering at the University of Strathclyde, Glasgow, Scotland (http://www.esru.strath.ac.uk/projects/EandE/99-00/bio_fuel_cells/groupproject/library/fceconomics/text.htm) and the *Fuel Cell Policy Climate Assessment* prepared by The Centre for Energy Policy and Technology, Imperial College of Science, Technology and Medicine (London, May 2001).

As shown in Table 6.1, approaches to commercialization are either technology-driven or market-driven. This assessment takes a market-driven approach to promoting fuel cells. To date, most commercialization efforts internationally and in Russia have been technology-driven. An example of the technology-driven approach is when explicit market analyses are conducted after the technology has been developed to a significant degree. Thus, market requirements become secondary to technology development. In this approach, a technology is conceptualized and developed based primarily on technical status and merits. The premise is that once the widely applicable technology is developed, it can be "pushed" into a market that is yet to be clearly defined.

Table 6.1 Approaches for Commercializing Fuel Cells

TECHNOLOGY-DRIVEN APPROACH	MARKET-DRIVEN APPROACH
Technologies drive RD&D and business development	Market criteria drive RD&D and business development
Products are "pushed" into the market (e.g., via subsidies, laws)	Market-derived specifications will attain market penetration through market-pull
Pragmatic, step-by-step approach	Fully integrated approach

In contrast, the market-driven approach derives the technical and economic specifications for technology systems and components from market considerations. The specifications, in turn, define the research, development and demonstration (RD&D) goals and determine the associated time frames for development and market penetration.

This process ensures that technologies can be implemented to attain business and policy goals by satisfying market criteria without regulatory benefits or penalties on various market participants, thereby ensuring a smooth and sustained market penetration by means of market-pull.[2]

Disseminating information can be an important tool for promoting and marketing fuel cells in the manufacturing sector. For example, the “Strategic Plan for Distributed Energy Resources” that DOE’s Office of Energy Efficiency and Renewable Energy prepared was translated into Russian with commentaries for the November 2001 issue of *Industry Energy*. This review contains a detailed description of fuel cell technologies. The team working on this assessment plans to distribute this report and other information on fuel cells to industrial energy managers through the Russian Energy Managers Association (REMA). Fuel cells were on the agenda for the Second All-Russian Seminar of REMA on “Independent Power Producers and Local Energy Supply” that was held in September 2001. However, a much more comprehensive effort to inform facility managers, architects, designers, and other energy decision makers about fuel cells could also play an important role in promoting the technology.

[2] Peter B. Bos, Polydyne Inc., Presentation at Fourth Grove Fuel Cell Symposium Commonwealth Institute London, England, 19-22 September 1995.

FINANCING FOR FUEL CELLS

Financing can be challenging in Russia because of the investment climate. That said, many local and international sources of financing do exist for sustainable energy projects in Russia. The International Finance Corporation and Global Environment Facility, for example, are considering launching an initiative to finance fuel cell projects globally. Feasible, cost-effective Russian projects might be able to tap these sources.

The simplest form of financing is when a customer can afford to pay in full. This assessment has tried to target potential customers that have the resources to invest in fuel cells: oil and gas companies, metallurgical firms, wealthy homeowners, banks, and certain government institutions. Other potential sources of financing for companies include local banks, shareholders, and investment funds.

PARTNERSHIPS BETWEEN RUSSIAN AND FOREIGN FUEL CELL MANUFACTURERS

When the needs and opportunities of both Russian and foreign fuel cell manufacturers are identified, several ways to collaborate are possible such as: sale of licenses and "know-how," sale of hardware; joint development of projects; and establishing joint ventures for development, manufacturing, and operation of new fuel cell-based power plants. Appendix 6.A contains a list of best-known companies involved in the fuel cell business (http://www.me3.org/issues/fuelcells/). As with other types of technologies, often foreign manufacturers begin simply by selling equipment in Russia through a local representative with an excellent knowledge of the Russian market. As this partnership develops, the foreign company may decide to offer servicing from local companies, then final assembly. Manufacture usually comes quite a bit later, when the foreign partners see meaningful domestic demand. While this is a typical scenario for developing manufacturing joint ventures, some foreign companies decide to set up manufacturing operations in Russia not based on Russian demand, but rather on Russian production cost advantages. The same could be true for fuel cells, although foreign companies would need to feel confident in the production quality and in their ability to maintain intellectual property that they own.

FINAL REMARKS

Fuel cells can benefit Russia by providing a clean, flexible source of heat and power. There are realistic, albeit targeted niche markets for fuel cells in Russia in the near term, and some potential customers have issued requests for bids or documentation on fuel cells. These include oil and gas companies, banks, and municipalities. Most likely, the market for fuel cells will be small to begin with, as it has been the world over. However, attracting interest in fuel cells in Russia is important because it can create a bridge between Western fuel cell developers, Russian equipment vendors, and Russian fuel cell researchers. This last link with researchers is particularly important because of the potential Russia's research has for lowering the costs of fuel cells globally. Yet this link has proven difficult to make. Focusing on markets may build productive partnerships by lowering transaction costs for Western fuel cell firms interested in Russia and by helping Russian researchers understand the demand for fuel cells and how to better design fuel cells to meet this demand.